CONTAMINATION CONTROL
SOLUTIONS

PASSION TO PERFORM

MPFILTRI®

A WORLDWIDE LEADER IN THE FIELD OF HYDRAULIC FILTRATION EQUIPMENT.

Our company started life in 1964, when Bruno Pasotto decided to attempt to cater for the requests of a market still to be fully explored, with the study, design, development, production and marketing of a vast range of filters for hydraulic equipment, capable of satisfying the needs of manufacturers in all sectors. The quality of our products, our extreme competitiveness compared with major international producers and our constant activities of research, design and development has made us a worldwide leader in the field of hydraulic circuit filtering.
Present for 50 years in the market, we have played a truly decisive role in defining our sector, and by now we are a group capable of controlling our entire chain of production, monitoring all manufacturing processes to guarantee superior quality standards and to provide concrete solutions for the rapidly evolving needs of customers and the market.

MARKET **LEADER**

Our work is based on a skillful interaction between advanced technology and fine workmanship, **customizing products according to specific market requests**, focusing strongly on innovation and quality, and following every step in the manufacturing of both standard and special products, fully respecting customer expectations.

Our customer-oriented philosophy, which enables us to satisfy all customer requests **rapidly** and **with personalized products**, makes us a **dynamic and flexible enterprise**. The possibility of constantly controlling and monitoring the entire production process is essential to allow us to guarantee the quality of our products.

WORLDWIDE PRESENCE

Our foreign Branches enable us to offer a diversified range of products that allow us to successfully face the aggressive challenge of international competition, and also to maintain a stable presence at a local level.

The Group boasts **8** **business branches**

TECHNOLOGY

Our constant **quest for excellence in quality and technological innovation** allows us to offer only the best solutions and services for applications in many fields, including general industry, test rigs, lubrication, heavy engineering, renewable energies, naval engineering, offshore engineering, aviation systems, emerging technologies and mobile plant (i.e. tractors, excavators, concrete pumps, platforms).

AND PRODUCTION

Our high level of technological expertise means **we can rely entirely on our own resources, without resorting to external providers.** This in turn enables us to satisfy a growing number of customer requests, also exploiting our constantly updated range of machines and equipment, featuring **fully-automated workstations** capable of **24-hour production**.

SUCTION FILTERS

Flow rates
up to 875 l/min

Mounting:
- Tank immersed
- In-Line
- In tank with shut off valve
- In tank with flooded suction

RETURN FILTERS

Flow rates
up to 3000 l/min

Pressure
up to 20 bar

Mounting:
- In-Line
- Tank top
- In single and duplex designs

RETURN / SUCTION FILTERS

Flow rates
up to 300 l/min

Pressure
up to 80 bar

Mounting:
- In-Line
- Tank top

SPIN-ON FILTERS

Flow rates
up to 365 l/min

Pressure
up to 35 bar

Mounting:
- In-Line
- Tank top

LOW & MEDIUM PRESSURE FILTERS

Flow rates
up to 3000 l/min

Pressure
up to 80 bar

Mounting:
- In-Line
- Parallel manifold version
- In single and duplex designs

HIGH PRESSURE FILTERS

Flow rates
up to 750 l/min

Pressure from 110 bar
up to 560 bar

Mounting:
- In-Line
- Manifold
- In single and duplex designs

PRODUCT RANGE

MP Filtri can offer a vast and articulated range of products for the global market, suitable for all industrial sectors using hydraulic equipment.

This includes filters (suction, return, return/suction, spin-on, pressure, stainless steel pressure) and structural components (motor/pump bell-housings, transmission couplings, damping rings, foot brackets, aluminium tanks, cleaning covers).

We can provide all the skills and solutions required by the modern hydraulics industry to monitor contamination levels and other fluid conditions.

Mobile filtration units and a full range of accessories allow us to supply everything necessary for a complete service in the hydraulic circuits.

STAINLESS STEEL HIGH PRESSURE FILTERS

Flow rates up to 125 l/min
Pressure from 320 bar
up to 1000 bar

Mounting:
- In-Line
- Manifold
- In single and duplex designs

CONTAMINATION MONITORING PRODUCTS

- Online, in-line particle counters
- Off-line bottle sampling products
- Fully calibrated using relevant ISO standards
- A wide range of variants to support fluid types and communication protocols

MOBILE FILTRATION UNITS

Flow rates from 15 l/min
up to 200 l/min

POWER TRANSMISSION PRODUCTS

- Aluminium bell-housings for motors from 0.12 kW to 400 kW
- Couplings in Aluminium Cast Iron - Steel
- Damping rings
- Foot bracket
- Aluminium tanks
- Cleaning covers

ACCESSORIES

- Oil filler and air breather plugs
- Optical and electrical level gauges
- Pressure gauge valve selectors
- Pipe fixing brackets
- Pressure gauges

CONTAMINATION CONTROL SOLUTIONS

Contamination Monitoring Products

...because contamination costs!

INDEX

1 page		INTRODUCTION
1	COMPANY	
6	PRODUCT RANGE	
11	CONTAMINATION MANAGEMENT	

18 page		AUTOMATIC PARTICLE COUNTERS
21	LPA3	Portable Particle Counter
27	LPA2	Twin Laser Particle Analyser
33	CML2	Compact Twin Laser Contamination Monitor
39	ICM 2.0	In-line Contamination Monitor
45	AZ2	ATEX Fluid Contamination Monitors
51	ICU	In-line Contamination Monitoring Unit
57	ACMU	Auxiliary Contamination Monitoring Unit
63	BS110 & BS500	Bottle Samplers
72	HOW SAMPLING	
75	VPAF100	Patch test kit
78	FLUID COMPATIBILITY CHARTS	
81	SPARE PARTS LIST	
83	ACCESSORIES	

92 page		MOBILE FILTRATION UNITS
95	UFM 015	Mobile filtration unit 15 l/min flow rate
101	UFM 041	Mobile filtration unit 34 l/min flow rate
107	UFM 051	Mobile filtration unit 50 l/min flow rate
113	UFM 091	Mobile filtration unit 90 l/min flow rate
119	UFM 181	Mobile filtration unit 180 l/min flow rate
125	UFM 919	Mobile filtration unit 90 l/min and 180 l/min flow rate
131	FTU 080	Fluid transfer unit 15 l/min flow rate

Contamination management

INDEX

		Page
1	HYDRAULIC FLUIDS	12
2	FLUIDS CONTAMINATION	12
3	EFFECTS OF CONTAMINATION ON HYDRAULIC COMPONENTS	12
4	MEASURING THE SOLID CONTAMINATION LEVEL	13
5	RECOMMENDED CONTAMINATION CLASSES	16
6	WATER IN HYDRAULIC AND LUBRICATING FLUIDS	16

1 HYDRAULIC FLUIDS

The fluid is the vector that transmits power, energy within an oleodynamic circuit. In addition to transmitting energy through the circuit, it also performs additional functions such as lubrication, protection and cooling of the surfaces.
The classification of fluids used in hydraulic systems is coded in many regulatory references, different Standards.

The most popular classification criterion divides them into the following families:
- MINERAL OILS
  Commonly used oil deriving fluids.

- FIRE RESISTANT FLUIDS
  Fluids with intrinsic characteristics of incombustibility or high flash point.

- SYNTHETIC FLUIDS
  Modified chemical products to obtain specific optimized features.

- ECOLOGICAL FLUIDS
  Synthetic or vegetable origin fluids with high biodegradability characteristics.

The choice of fluid for an hydraulic system must take into account several parameters.
These parameters can adversely affect the performance of an hydraulic system, causing delay in the controls, pump cavitation, excessive absorption, excessive temperature rise, efficiency reduction, increased drainage, wear, jam/block or air intake in the plant.

The main properties that characterize hydraulic fluids and affect their choice are:
- DYNAMIC VISCOSITY
  It identifies the fluid's resistance to sliding due to the impact of the particles forming it.

- CINEMATIC VISCOSITY
  It is a widespread formal dimension in the hydraulic field.
  It is calculated with the ratio between the dynamic viscosity and the fluid density.
  Cinematic viscosity varies with temperature and pressure variations.

- VISCOSITY INDEX
  This value expresses the ability of a fluid to maintain viscosity when the temperature changes.
  A high viscosity index indicates the fluid's ability to limit viscosity variations by varying the temperature.

- FILTERABILITY INDEX
  It is the value that indicates the ability of a fluid to cross the filter materials.
  A low filterability index could cause premature clogging of the filter material.

- WORKING TEMPERATURE
  Working temperature affects the fundamental characteristics of the fluid.
  As already seen, some fluid characteristics, such as cinematic viscosity, vary with the temperature variation.
  When choosing a hydraulic oil, must therefore be taken into account of the environmental conditions in which the machine will operate.

- COMPRESSIBILITY MODULE
  Every fluid subjected to a pressure contracts, increasing its density.
  The compressibility module identifies the increase in pressure required to cause a corresponding increase in density.

- HYDROLYTIC STABILITY
  It is the characteristic that prevents galvanic pairs that can cause wear in the plant/system.

- ANTIOXIDANT STABILITY AND WEAR PROTECTION
  These features translate into the capacity of a hydraulic oil to avoid corrosion of metal elements inside the system.

- HEAT TRANSFER CAPACITY
  It is the characteristic that indicates the capacity of hydraulic oil to exchange heat with the surfaces and then cool them.

2 FLUID CONTAMINATION

Whatever the nature and properties of fluids, they are inevitably subject to contamination. Fluid contamination can have two origins:

- INITIAL CONTAMINATION
  Caused by the introduction of contaminated fluid into the circuit, or by incorrect storage, transport or transfer operations.

- PROGRESSIVE CONTAMINATION
  Caused by factors related to the operation of the system, such as metal surface wear, sealing wear, oxidation or degradation of the fluid, the introduction of contaminants during maintenance, corrosion due to chemical or electrochemical action between fluid and components, cavitation.
  The contamination of hydraulic systems can be of different nature:

- SOLID CONTAMINATION
  For example rust, slag, metal particles, fibers, rubber particles, paint particles
- or additives

- LIQUID CONTAMINATION
  For example, the presence of water due to condensation or external infiltration or acids

- GASEOUS CONTAMINATION
  For example, the presence of air due to inadequate oil level in the tank, drainage in suction ducts, incorrect sizing of tubes or tanks.

3 EFFECTS OF CONTAMINATION ON HYDRAULIC COMPONENTS

Solid contamination is recognized as the main cause of malfunction, failure and early degradation in hydraulic systems. It is impossible to delete it completely, but it can be effectively controlled by appropriate devices.

CONTAMINATION IN PRESENCE OF LARGE TOLERANCES

CONTAMINATION IN PRESENCE OF NARROW TOLERANCES

Solid contamination mainly causes surface damage and component wear.

- SURFACE EROSION
  Cause of leakage through mechanical seals, reduction of system performance, variation in adjustment of control components, failures.

- ADHESION OF MOVING PARTS
  Cause of failure due to lack of lubrication.

- DAMAGES DUE TO FATIGUE
  Cause of breakdowns and components breakdown.

ABRASION

EROSION

ADHESION

FATIGUE

Liquid contamination mainly results in decay of lubrication performance and protection of fluid surfaces.

DISSOLVED WATER

- INCREASING FLUID ACIDITY
  Cause of surface corrosion and premature fluid oxidation

- GALVANIC COUPLE AT HIGH TEMPERATURES
  Cause of corrosion

FREE WATER - ADDITIONAL EFFECTS

- DECAY OF LUBRICANT PERFORMANCE
  Cause of rust and sludge formation, metal corrosion and increased solid contamination

- BATTERY COLONY CREATION
  Cause of worsening in the filterability feature

- ICE CREATION AT LOW TEMPERATURES
  Cause damage to the surface

- ADDITIVE DEPLETION
  Free water retains polar additives

Gaseous contamination mainly results in decay of system performance.

- CUSHION SUSPENSION
  Cause of increased noise and cavitation.

- FLUID OXIDATION
  Cause of corrosion acceleration of metal parts.

- MODIFICATION OF FLUID PROPERTIES
  (COMPRESSIBILITY MODULE, DENSITY, VISCOSITY)
  Cause of system's reduction of efficiency and of control.
  It is easy to understand how a system without proper contamination management is subject to higher costs than a system that is provided.

- MAINTENANCE
  Maintenance activities, spare parts, machine stop costs

- ENERGY AND EFFICIENCY
  Efficiency and performance reduction due to friction, drainage, cavitation.

4 MEASURING THE SOLID CONTAMINATION LEVEL

The level of contamination of a system identifies the amount of contaminant contained in a fluid.
This parameter refers to a unit volume of fluid.
The level of contamination may be different at different points in the system.
From the information in the previous paragraphs it is also apparent that the level of contamination is heavily influenced by the working conditions of the system, by its working years and by the environmental conditions.

What is the size of the contaminating particles that we must handle in our hydraulic circuit?

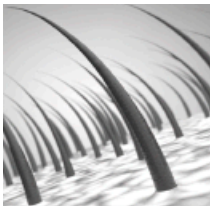

HUMAN HAIR
(75 µm)

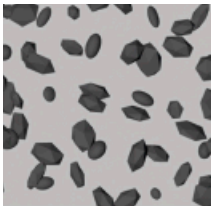

MINIMUM DIMENSION VISIBLE HUMAN EYES
(40 µm)

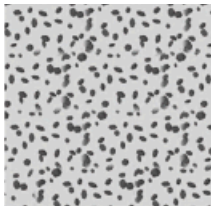

TYPICAL CONTAMINANT DIMENSION IN A HYDRAULIC CIRCUIT
(4÷14 µm)

Contamination level analysis is significant only if performed with a uniform and repeatable method, conducted with standard test methods and suitably calibrated equipment.
To this end, ISO has issued a set of standards that allow tests to be conducted and express the measured values in the following ways.

- GRAVIMETRIC LEVEL - ISO 4405

The level of contamination is defined by checking the weight of particles collected by a laboratory membrane. The membrane must be cleaned, dried and desiccated, with fluid and conditions defined by the Standard.
The volume of fluid is filtered through the membrane by using a suitable suction system. The weight of the contaminant is determined by checking the weight of the membrane before and after the fluid filtration.

CLEAN
MEMBRANE

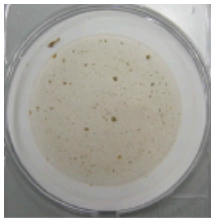

CONTAMINATED
MEMBRANE

- CUMULATIVE DISTRIBUTION OF THE PARTICLES SIZE - ISO 4406

The level of contamination is defined by counting the number of particles of certain dimensions per unit of volume of fluid. Measurement is performed by Automatic Particle Counters (APC).
Following the count, the contamination classes are determined, corresponding to the number of particles detected in the unit of fluid.
The most common classification methods follow ISO 4406 and SAE AS 4059 (Aerospace Sector) regulations.
NAS 1638 is still used although obsolete.

Classification example according to ISO 4406

The code refers to the number of particles of the same size or greater than 4, 6 or 14 µm in a 1 ml fluid.

Class	Number of particles per ml	
	Over	Up to
28	1 300 000	2 500 000
27	640 000	1 300 000
26	320 000	640 000
25	160 000	320 000
24	80 000	160 000
23	40 000	80 000
22	20 000	40 000
21	10 000	20 000
20	5 000	10 000
19	2 500	5 000
18	1 300	2 500
17	640	1 300
16	320	640
15	160	320
14	80	160
13	40	80
12	20	40
11	10	20
10	5	10
9	2.5	5
8	1.3	2.5
7	0.64	1.3
6	0.32	0.64
5	0.16	0.32
4	0.08	0.16
3	0.04	0.08
2	0.02	0.04
1	0.01	0.02
0	0	0.01

> 4 $\mu m_{(c)}$ = 350 particles
> 6 $\mu m_{(c)}$ = 100 particles
> 14 $\mu m_{(c)}$ = 25 particles
16 / 14 / 12

ISO 4406:2017 Cleanliness Code System

Microscope counting examines the particles differently to APCs and the code is given with two scale numbers only.
These are at 5 µm and 15 µm equivalent to the 6 $\mu m_{(c)}$ and 14 $\mu m_{(c)}$ of APCs.

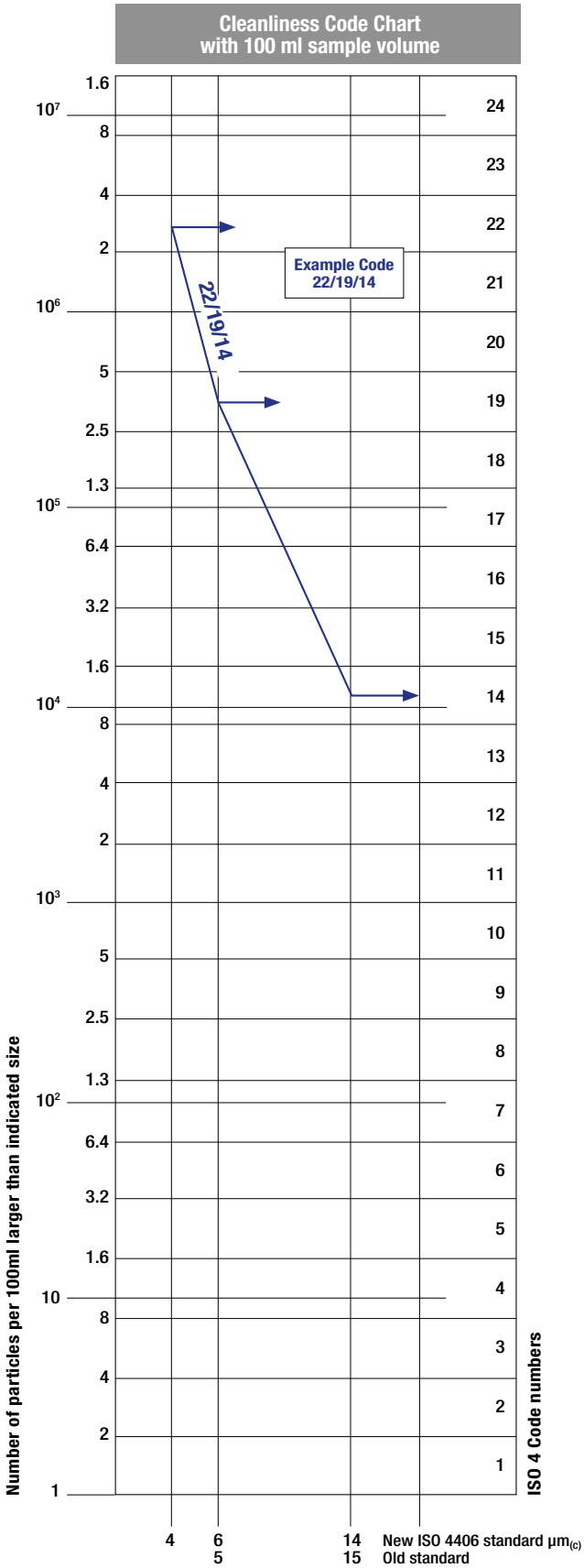

- CUMULATIVE DISTRIBUTION OF THE PARTICLES SIZE - SAE AS 4059-1 and SAE AS 4059-2

Classification example according to SAE AS 4059-1 and SAE AS 4059-2
The code, prepared for the aerospace industry, is based on the size, quantity, and particle spacing in a 100 ml fluid sample. The contamination classes are defined by numeric codes, the size of the contaminant is identified by letters (A-F).

It can be made a differential measurement (Table 1) or a cumulative measurement (Table 2)

Table 1 - Class for differential measurement

Class	Dimension of contaminant				
	6÷14 µm(c)	14÷21 µm(c)	21÷38 µm(c)	38÷70 µm(c)	>70 µm(c)
00	125	22	4	1	0
0	250	44	8	2	0
1	500	89	16	3	1
2	1 000	178	32	6	1
3	2 000	356	63	11	2
4	4 000	712	126	22	4
5	8 000	1 425	253	45	8
6	16 000	2 850	506	90	16
7	32 000	5 700	1 012	180	32
8	64 000	11 400	2 025	360	64
9	128 000	22 800	4 050	720	128
10	256 000	45 600	8 100	1 440	256
11	512 000	91 200	16 200	2 880	512
12	1 024 000	182 400	32 400	5 760	1 024

6÷14 µm(c) = 15 000 particles
14÷21 µm(c) = 2 200 particles
21÷38 µm(c) = 200 particles
38÷70 µm(c) = 35 particles
> 70 µm(c) = 3 particles
Class 6

Table 2 - Class for cumulative measurement

Class	Dimension of contaminant					
	>4 µm(c) A	>6 µm(c) B	>14 µm(c) C	>21 µm(c) D	>38 µm(c) E	>70 µm(c) F
000	195	76	14	3	1	0
00	390	152	27	5	1	0
0	780	304	54	10	2	0
1	1 560	609	109	20	4	1
2	3 120	1 217	217	39	7	1
3	6 250	2 432	432	76	13	2
4	12 500	4 864	864	152	26	4
5	25 000	9 731	1 731	306	53	8
6	50 000	19 462	3 462	612	106	16
7	100 000	38 924	6 924	1 224	212	32
8	200 000	77 849	13 849	2 449	424	64
9	400 000	155 698	27 698	4 898	848	128
10	800 000	311 396	55 396	9 796	1 696	256
11	1 600 000	622 792	110 792	19 592	3 392	512
12	3 200 000	1 245 584	221 584	39 184	6 784	1 024

> 4 µm(c) = 45 000 particles
> 6 µm(c) = 15 000 particles
> 14 µm(c) = 1 500 particles
> 21 µm(c) = 250 particles
> 38 µm(c) = 15 particles
> 70 µm(c) = 3 particles
Class from 2F to 4E

- CLASSES OF CONTAMINATION ACCORDING TO NAS 1638 (January 1964)

The NAS system was originally developed in 1964 to define contamination classes for the contamination contained within aircraft components.
The application of this standard was extended to industrial hydraulic systems simply because nothing else existed at the time.
The coding system defines the maximum numbers permitted of 100ml volume at various size intervals (differential counts) rather than using cumulative counts as in ISO 4406:1999. Although there is no guidance given in the standard on how to quote the levels, most industrial users quote a single code which is the highest recorded in all sizes and this convention is used on MP Filtri APC's.

The contamination classes are defined by a number (from 00 to 12) which indicates the maximum number of particles per 100 ml, counted on a differential basis, in a given size bracket.

Size Range Classes (in microns)

Maximum Contamination Limits per 100 ml					
Class	5÷15	15÷25	25÷50	50÷100	>100
00	125	22	4	1	0
0	250	44	8	2	0
1	500	89	16	3	1
2	1 000	178	32	6	1
3	2 000	356	63	11	2
4	4 000	712	126	22	4
5	8 000	1 425	253	45	8
6	16 000	2 850	506	90	16
7	32 000	5 700	1 012	180	32
8	64 000	11 400	2 025	360	64
9	128 000	22 800	4 050	720	128
10	256 000	45 600	8 100	1 440	256
11	512 000	91 200	16 200	2 880	512
12	1 024 000	182 400	32 400	5 760	1 024

5÷15 µm = 42 000 particles
15÷25 µm = 2 200 particles
25÷50 µm = 150 particles
50÷100 µm = 18 particles
> 100 µm = 3 particles
Class NAS 8

- CUMULATIVE DISTRIBUTION OF THE PARTICLES SIZE - ISO 4407

The level of contamination is defined by counting the number of particles collected by a laboratory membrane per unit of fluid volume. The measurement is done by a microscope.
The membrane must be cleaned, dried and desiccated, with fluid and conditions defined by the Standard. The fluid volume is filtered through the membrane, using a suitable suction system.
The level of contamination is identified by dividing the membrane into a predefined number of areas and by counting the contaminant particles using a suitable laboratory microscope.

MICROSCOPE CONTROL AND MEASUREMENT

COMPARISON PHOTOGRAPH'S

1 graduation = 10µm

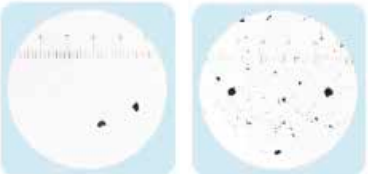

ISO 4406:1999	Class 16/14/11	Class 22/20/17
SAE AS4059E Table 1	Class 5	Class 11
NAS 1638	Class 5	Class 11
SAE AS4059E Table 2	Class 6A/5B/5C	Class 12A/11B/11C

- CLEANLINESS CODE COMPARISON

Although ISO 4406:2017 standard is being used extensively within the hydraulics industry other standards are occasionally required and a comparison may be requested. The table below gives a very general comparison but often no direct comparison is possible due to the different classes and sizes involved.

ISO 4406:2017	SAE AS4059 Table 2	SAE AS4059 Table 1	NAS 1638
> 4 µm(c) 6 µm(c) 14 µm(c)	> 4 µm(c) 6 µm(c) 14 µm(c)	4-6 6-14 14-21 21-38 38-70 >70	5-15 15-25 25-50 50-100 >100
23 / 21 / 18	13A / 12B / 12C	12	12
22 / 20 / 17	12A / 11B / 11C	11	11
21 / 19 / 16	11A / 10B / 10C	10	10
20 / 18 / 15	10A / 9B / 9B	9	9
19 / 17 / 14	9A / 8B / 8C	8	8
18 / 16 / 13	8A / 7B / 7C	7	7
17 / 15 / 12	7A / 6B / 6C	6	6
16 / 14 / 11	6A / 5B / 5C	5	5
15 / 13 / 10	5A / 4B / 4C	4	4
14 / 12 / 09	4A / 3B / 3C	3	3

5 RECOMMENDED CONTAMINATION CLASSES

Any are the nature and the properties of fluids, they are inevitably subject to contamination. The level of contamination can be managed by using special components called filters.
Hydraulic components builders, knowing the problem of contamination, recommend the filtration level appropriate to the use of their products.

Example of recommended contamination levels for pressures below 140 bar.

Piston pumps with fixed flow rate	•					
Piston pumps with variable flow rate			•			
Vane pumps with fixed flow rate		•				
Vane pumps with variable flow			•			
Engines	•					
Hydraulic cylinders	•					
Actuators					•	
Test benches						•
Check valve	•					
Directional valves	•					
Flow regulating valves	•					
Proportional valves				•		
Servo-valves					•	
Flat bearings			•			
Ball bearings				•		
ISO 4406 CODE	20/18/15	19/17/14	18/16/13	17/15/12	16/14/11	15/13/10
Recommended filtration $\beta_{x(c)} \geq 1.000$	$\beta_{20(c)}$ >1000	$\beta_{15(c)}$ >1000	$\beta_{10(c)}$ >1000	$\beta_{7(c)}$ >1000	$\beta_{7(c)}$ >1000	$\beta_{5(c)}$ >1000

6 WATER IN HYDRAULIC AND LUBRICATING FLUIDS

Water Content

In mineral oils and non aqueous resistant fluids water is undesirable. Mineral oil usually has a water content of 50-300 ppm (@40°C) which it can support without adverse consequences.
Once the water content exceeds about 300ppm the oil starts to appear hazy. Above this level there is a danger of free water accumulating in the system in areas of low flow. This can lead to corrosion and accelerated wear.
Similarly, fire resistant fluids have a natural water which may be different to mineral oil.

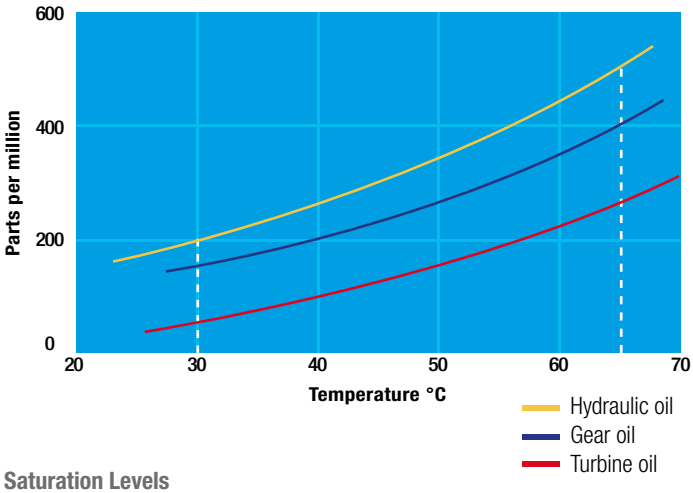

Saturation Levels

Since the effects of free (also emulsified) water is more harmful than those of dissolved water, water levels should remain well below the saturation point.

However, even water in solution can cause damage and therefore every reasonable effort should be made to keep saturation levels as low as possible. There is no such thing as too little water. As a guideline, we recommend maintaining saturation levels below 50% in all equipment.

TYPICAL WATER SATURATION LEVEL FOR NEW OILS
Examples:
Hydraulic oil @ 30°C = 200ppm = 100% saturation
Hydraulic oil @ 65°C = 500ppm = 100% saturation

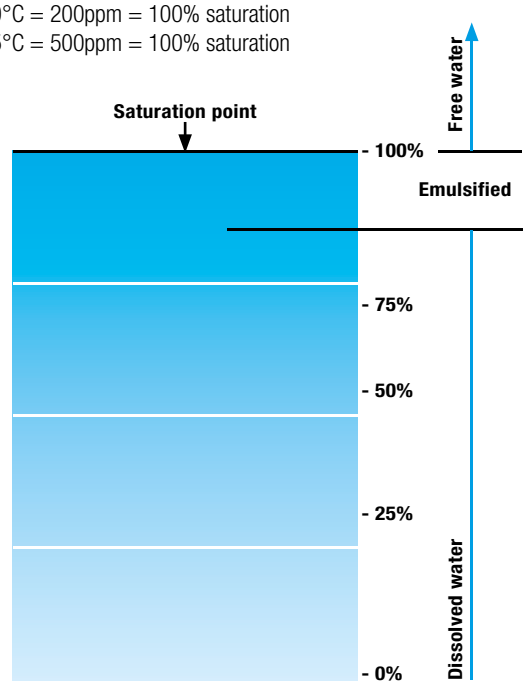

W - Water and Temperature Sensing

"W" option, in MP Filtri Contamination Monitoring Products, indicates water content as a percentage of saturation and oil temperature in degrees centigrade. 100% RH corresponds to the point at which free water can exist in the fluid. i.e. the fluid is no longer able to hold the water in a dissolved solution.
The sensor can help provide early indication of costly failure due to free water, including but not exclusive to:
- Corrosion
- Metal surface fatigue e.g. bearing failure
- Reduced lubrication & load carrying characteristics

Different oils have different saturation levels and therefore RH (relative humidity) % is the best and most practical measurement.

Water absorber

Water is present everywhere, during storage, handling and servicing.

MP Filtri filter elements feature an absorbent media which protects hydraulic systems from both particulate and water contamination.
MP Filtri's filter element technology is available with inorganic microfiber media with a filtration rating 25 µm (therefore identified with media designation WA025, providing absolute filtration of solid particles to $\beta_{x(c)} = 1000$).
Absorbent media is made by water absorbent fibres which increase in size during the absorption process.
Free water is thus bonded to the filter media and completely removed from the system (it cannot even be squeezed out).

Filter Media

Fabric that absorbs water

Absorber media layer

The Filter Media has absorbed water

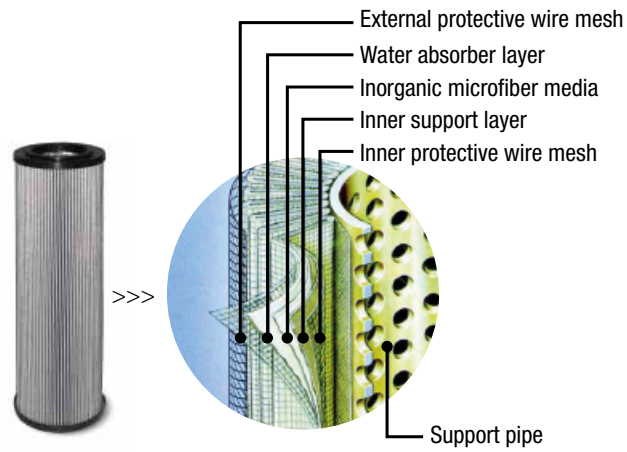

By removing water from your fluid power system, you can prevent such key problems as:
- corrosion (metal etching)
- loss of lubricant power
- accelerated abrasive wear in hydraulic components
- valve-locking
- bearing fatigue
- viscosity variance (reduction in lubricating properties)
- additive precipitation and oil oxidation
- increase in acidity level
- increased electrical conductivity (loss of dielectric strength)
- slow/weak response of control systems

Product availability - UFM Series:
UFM 041
UFM 051
UFM 091
UFM 181
UFM 919

You can see right through our results

It's no secret the presence of particles in the hydraulic fluid is the primary cause of failure, unreliability and short component life in hydraulic systems - whether they be fluid power, lubrication or fuel. We have developed an extensive range of products to help you safeguard your machines and systems from potential failure.

Benefits:
- **Promptly measures and maintains the appropriate fluid cleanliness level**
- **Damages and downtime are minimised, reducing costs**
- **Provides a maintenance regime to immediately respond to an incident**

Applications:
- **Industrial hydraulic and lubrication systems**
- **Mobile hydraulics**

Automatic Particle Counters

LPA3

LPA2

CML2

ICM 2.0

AZ2

ICU

ACMU

BS110 & BS500

VPAF100

LPA3	page 21
LPA2	27
CML2	33
ICM 2.0	39
AZ2	45
ICU	51
ACMU	57
BS110 & BS500	63
HOW SAMPLING	72
VPAF100	75
FLUID COMPATIBILITY CHARTS	page 78
SPARE PARTS LIST	81
ACCESSORIES	83

LPA3

Portable Particle Counters

Description

Automatic Particle Counters

Portable Particle Counter

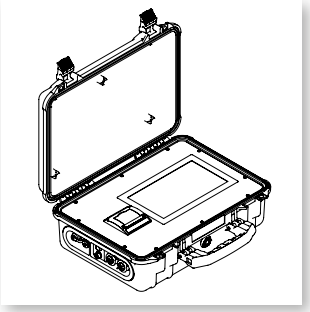

MP Filtri's new LPA3 is the most advanced portable particle counter in the world. Whether you are working in the lab or in the field, the LPA3 delivers a fast, accurate and comprehensive hydraulic health check in a robust yet portable package.
Its real-time monitoring and predictive maintenance technology safeguards machinery, enhances performance and productivity, and reduces costs and unplanned downtime. Featuring the latest breakthroughs in optical and photodiode technology, the new LPA3 enhances the reliability and longevity of complex hydraulic systems and is ideal for quality control in in-house manufacturing applications. The LPA3 is compatible with the full range of Bottle Samplers.

> Features & Benefits

- Online/realtime monitoring
- Comprehensive hydraulic health check
- Proactive maintenance capabilities
- High-speed sample times
- Programmable 10.1" (25.6cm) touchscreen display
- Perfectly portable at just 10kg
- Programmable sample volumes
- Precision Instrument
- Live trend analysis option
- Measures and displays the following international standard formats; ISO 4406, NAS 1638, AS 4059E&F, GBT 14039, GJB420B
- Moisture and temperature sensing
- Data logging and enhanced 4000 test result memory
- Key performance information at a glance
- LPA View software (included)
- Ideal for hydraulic, lubrication, and subsea fluids
- Integrated printer option
- Full accessories kit included
- Long-life Lithium Ion battery

Scope of Supply

1 x LPA3 (*)
1 x M16x2 microbore pressure hose, 1500mm long, pouch
1 x 2000mm quick release waste hose for LPA3 and pouch
1 x 1L waste receptacle
1 x Power Lead c/w UK/EU/US/AUS/CN heads
1 x USB cable
1 x Digital USB copy of user guides/software/drivers
2 x Hard copy of calibration certificate
5 x Thermal printer paper
1 x Carry bag

(*) Specific model will be as per ordered item

See Accessories at page 83.

Front facing view

Right facing view

Closed case
Front facing view

Closed case
Side view

Technical data

Technology
LED Based Light Extinction Automatic Optical Particle Counter

Particle Sizing
>4,6,14,21,25,38,50,70 $\mu m_{(c)}$ to ISO 4406:2017 Standard

Analysis range
ISO 4406:2017 Code 8 to 24
NAS 1638 Class 2 to 12
AS4059/ISO11218 Rev.E Table 1 Size Codes 2-12
AS4059/ISO11218 Rev.E Table 2 Size Codes, A:000 to 12, B:00 to 12, C:00 to 12, D:2 to 12, E: 4 to 12,F: 7 to 12
AS4059 Rev.F Table 1 Size Codes 2-12
AS4059 Rev.F Table 2 Size Codes, cpc (000 to 12, 00 to 12, 2 to 12, 4 to 12, 7 to 12)
GBT14039 Code 8 to 24
GJB420B Size codes, A:000 to 12, B:00 to 12, C:00 to 12, D:2 to 12, E: 4 to 12, F: 7 to 12

Accuracy
± 1/2 code for 4, 6, 14µ(c); ± 1 for larger sizes

Calibration
Each unit individually calibrated with ISO Medium Test Dust (MTD) based on ISO 11171, on equipment certified by I.F.T.S to ISO 11943

Viscosity range
Up to 400 cSt

Fluid temperature
Minimum: +5 °C
Maximum: +80 °C

Ambient temperature
Minimum: -10 °C
Maximum: +80 °C

Pressure Max
Minimum: 2 bar
Maximum: 420 bar

Sample Volume / Test time
Maximum 100ml per pump stroke.
Test volumes programmable by end user.
Pre-set volumes also available.

Moisture Sensing
% RH (Relative Humidity) ±3%

Temperature Measurement
±3%

Data Storage
4000 tests

System Pressure Measurement
+/- 0.5% Full Scale Accuracy Min 10 bar

Communication options
USB Output

Environmental Protection
IP66 (Lid closed) IP54 (Lid open)

Weight / Dimensions
10 kg, Height 292mm, Depth 155mm, Width 435mm

Electrical Supply
18-19V 2.1-3.0A

Power
Long-life Lithium Ion internal rechargeable battery (mains charger)

Software
LPA View software (included)

LPA3 is supplied with a full software package and digital product information

How LPA3 works - www.mpfiltri.com/index.php/products/oil-service/lpa-3.html

LPA3

FOCUS ON

Exclusive MP Filtri technology
Featuring the latest breakthroughs in LED and photodiode technology, the LPA3 delivers increased accuracy combined with excellent repeatability.

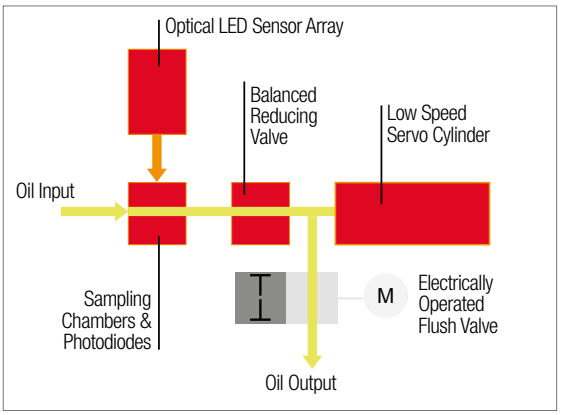

W-Option
Water Saturation level (RH%) and fluid temperature sensor option.

P-Option
Live Pressure Readout (bar/PSI) on display screen.

LED light source
A single point high accuracy LED measures particles across all sizes giving increased accuracy with excellent repeatability.

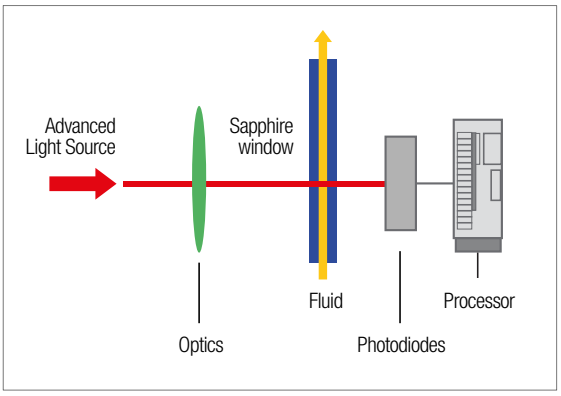

LPA View Software

The LPA View software is used with the LPA3, LPA2, CML2 and ICM particle counters. When connected to LPA View, MP Filtri CMPs can transfer results in realtime, or alternatively, historical results can be downloaded from the CMP's inbuilt memory.

- Runs on Windows XP, 7, and Windows 10
- Full adjustment & control of product settings, test times and alarms
- Easy test report generation
- Trend analysis
- Graphical display options
- Universal format across our contamination monitoring product range

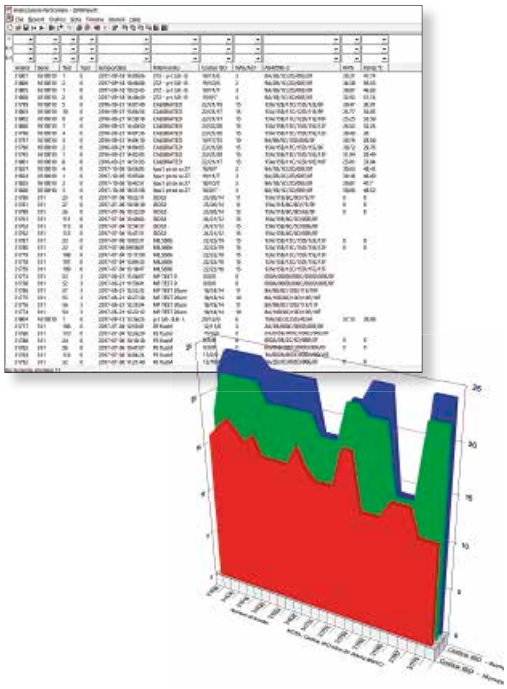

Dimensions

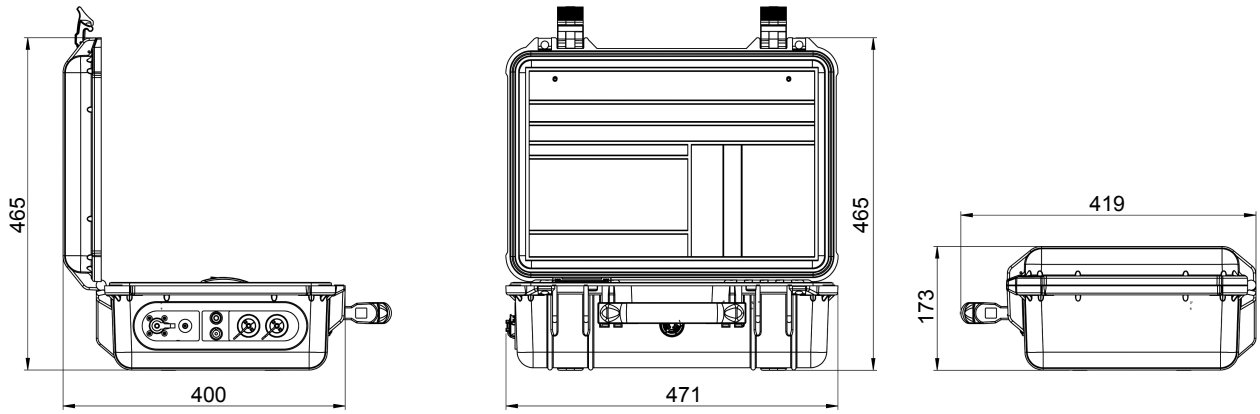

Designation & Ordering code

AUTOMATIC PARTICLE COUNTER LPA3

Configuration example: LPA3 W P M 0 0 1

Series

LPA3	Light extinction particle counter

Moisture Sensor

0	Without moisture and temperature sensor
W	With moisture and temperature sensor

Pressure Sensor

0	Without on-screen inlet pressure display
P	With on-screen inlet pressure display

Fluid compatibility

M	Mineral oil and synthetic fluid
N	Subsea fluids and water based fluids (*)
S	Phosphate ester and aggressive fluids (*) (**)

External Result Option

0	Without on board printer
1	With on board printer

Design Reference

0	Std option with full accessory kit and carry bag

Country Plug Type

1	UK, EU, US, AUS/CN

(*) **N** and **S** version, moisture sensor (W) not available (**) **S** Version Available soon

LPA2

Twin Laser Particle Analyser

Description

Automatic Particle Counters

Twin Laser Particle Analyser

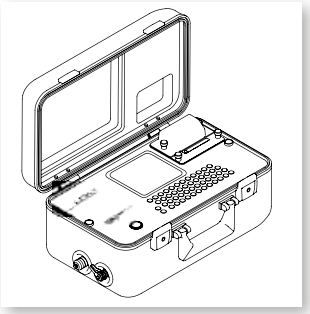

The LPA2 is a highly precise, lightweight & fully portable instrument suitable for on-site and laboratory applications. It can automatically measure and display particulate contamination, moisture and temperature levels in various hydraulic fluids. The LPA2 can be connected to the MP range of bottle sampler products to enable laboratory based particle counting.
The LPA2 is a solution for online monitoring of contamination in your hydraulic fluid, providing an immediate hydraulic health check. It employs predictive maintenance procedures to help reduce downtime and in turn costs.

> Features & Benefits

- LPA2 saves time: online/realtime monitoring
- Immediate hydraulic health check
- Predictive maintenance procedures can be employed
- Reduced downtime for industrial and mobile plants
- Reduced costs associated with downtime
- The lightest machine in its class
- Fully portable
- Precision Instrument
- Full Calibration based on ISO11171
- Measures and displays the following international standard formats; ISO 4406:2017, NAS 1638, AS 4059E
- Moisture and temperature sensing
- Data logging and 600 test result memory
- Manual and remote control flexibility
- LPA View software (included)
- Full size QWERTY keyboard
- Various test programme settings
- Full accessories kit included
- Internal rechargeable battery capable of performing 100 tests between charges

Scope of Supply

1 x LPA2 (*)
1 x M16x2 microbore pressure hose, 1500mm long
1 x 2000mm quick release waste hose for LPA2
1 x 1L waste receptacle
1 x 12V, 2A power adapter c/w UK/EU/US/AUS/CN heads
1 x 9 pin serial cable
1 x USB to serial converter
1 x 3 pin socket for external signals
1 x Hard copy of product user guide
1 x Digital copy of user guides/software/drivers
2 x Hard copy of calibration certificate
2 x Thermal printer paper
1 x Carry bag

(*) Specific model will be as per ordered item

See Accessories at page 83.

Front facing view

Right facing view

Closed case
Right facing view

Closed case
Left facing view

Technical data

Technology
Twin laser and twin optical diode detectors Based Light Extinction Automatic Optical Particle Analyser

Particle Sizing
>4,6,14,21,25,38,50,70 $\mu m_{(c)}$ to ISO 4406:2017 Standard

Analysis range
ISO 4406:1999 Code 8 to 24
NAS 1638 Class 2 to 12
AS4059 Rev. E Table 1 Size Codes 2-12
AS4059 rev. E Table 2 Size Codes, A:000 to 12, B:00 to 12, C:00 to 12, D:2 to 12, E: 4 to 12,F: 7 to 12

Accuracy
Better than 3% typical

Calibration
Each unit individually calibrated with ISO Medium Test Dust (MTD) based on ISO 11171, on equipment certified by I.F.T.S. To ISO 11943

Viscosity range
Up to 400 cSt

Fluid temperature
- From +5 °C to +80 °C

Pressure Max
400 bar (gauge) - minimum 2 bar (gauge) required

Sample Volume / Test time
8 ml. (short): 2:50
15 ml. (normal): 5:00
30 ml. (dynamic): 10:00
24 ml. (bottle sampler): 8:00
15 ml. (continuous): 5:00

Moisture Sensing
% RH (Relative Humidity) ±3%

Temperature Measurement
±3%

Data Storage
600 test

System Pressure Measurement
+/- 0.5% Full Scale Accuracy Min 10 bar

Communication options
RS232 9 pin D plug

Ambient Temperature min / max
-10 °C to +80 °C

Environmental Protection
IP51 (lid open)

Weight / Dimensions
9.8 kg, Height 210mm, Depth 260mm, Width 430mm

Electrical Supply
Voltage 9-36V DC

Power
Internal rechargeable battery (mains charger)

Outer Casing Finish
Anodised Aluminium

Wetted parts
M - C46400 Cu alloy, 316 stainless steel, FPM, FR4, sapphire.
N - 316 stainless steel, FPM, sapphire.
S - 316 stainless steel, perfluoro elastomer, sapphire, EPDM.

Software
LPA View software (included)

LPA2 is supplied with a full software package and digital product information

LPA2

FOCUS ON

Exclusive MP Filtri technology
The combination of the two lasers with a unique optics and photodiode package enables the LPA2 to give increased accuracy combined with excellent repeatability.

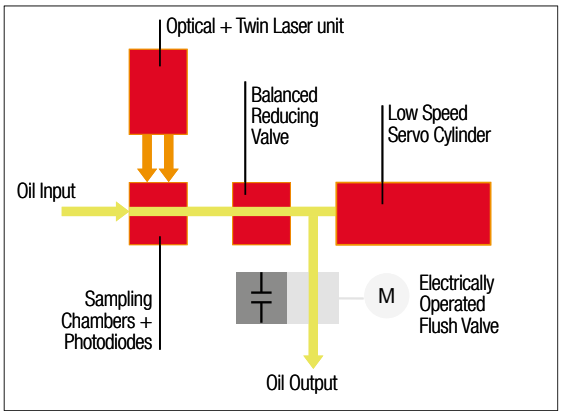

W-Option
Water Saturation level (RH%) and fluid temperature sensor option.

P-Option
Live Pressure Readout (bar) on display screen.

Laser 1
A single point high accuracy laser measures particles of contamination at 4 µm(c) and 6 µm(c) giving increased accuracy with excellent repeatability.

Laser 2
Standard accuracy laser specifically designed for system contaminants between 6 µm(c) and 70 µm(c).

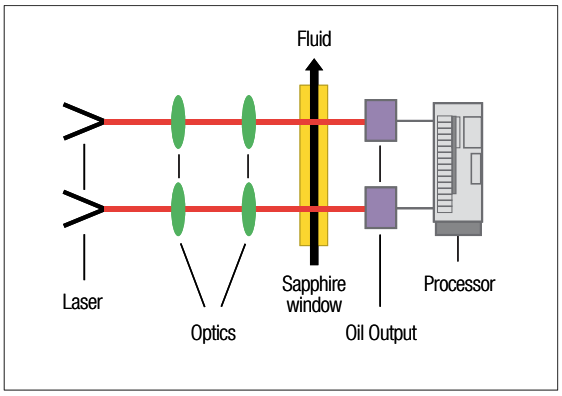

LPA View Software

The LPA View software is used with the LPA3, LPA2, CML2 and ICM particle counters. When connected to LPA View, MP Filtri CMPs can transfer results in realtime, or alternatively, historical results can be downloaded from the CMP's inbuilt memory.

- Runs on Windows XP, 7, and Windows 10
- Full adjustment & control of product settings, test times and alarms
- Easy test report generation
- Trend analysis
- Graphical display options
- Universal format across our contamination monitoring product range

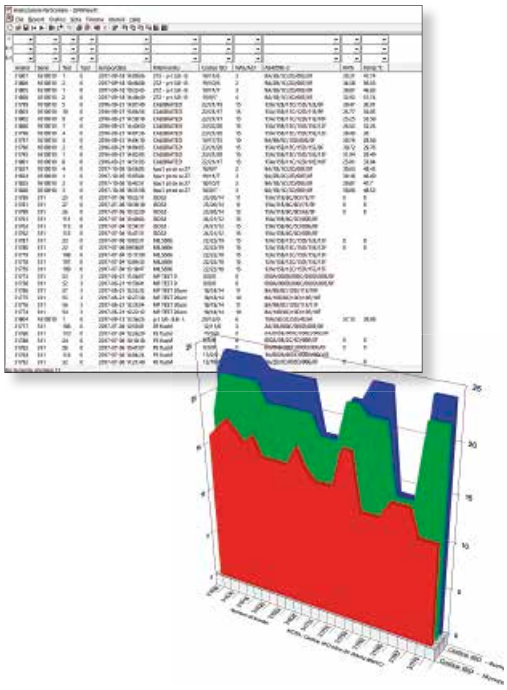

Dimensions

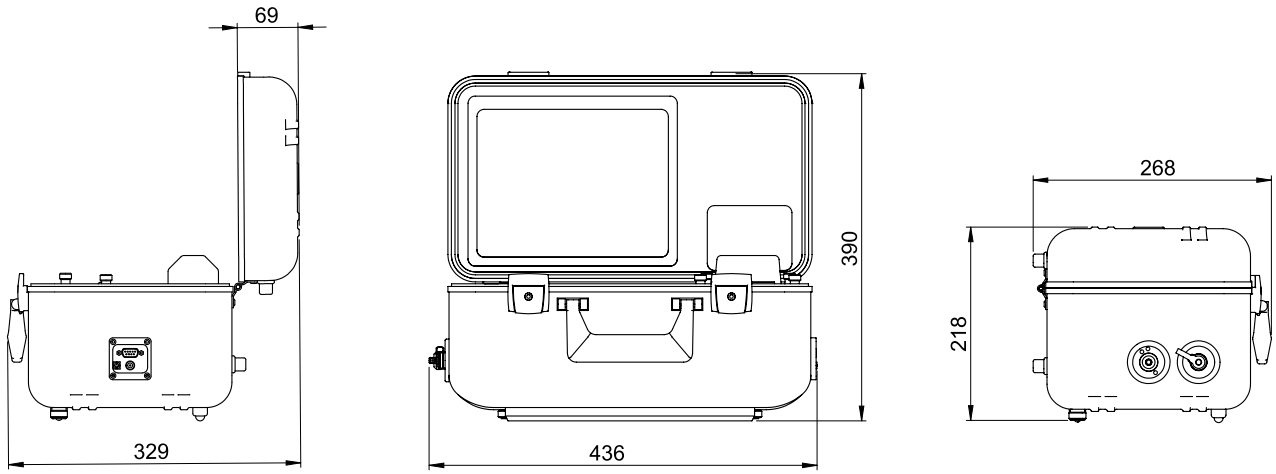

Designation & Ordering code

AUTOMATIC PARTICLE COUNTER LPA2

Configuration example: LPA2 | W | P | M | S | X | 30

Series

LPA2	Twin laser particle analyser

Moisture Sensor

0	Without moisture and temperature sensor
W	With moisture and temperature sensor

Pressure Sensor

0	Without on-screen inlet pressure display
P	With on-screen inlet pressure display

Fluid compatibility

M	Mineral oil
N	Subsea fluids and water based fluids (*)
S	Phosphate ester and aggressive fluids (*)

Accessories

S	Standard unit with carry bag
T	Standard unit with travel case

Bottle sampling options

X	Without bottle sampling

Design Reference

30

(*) **N** and **S** version, moisture sensor (W) not available

CML2

Compact Twin Laser Contamination Monitor

Description

Automatic Particle Counters

Compact Twin Laser Contamination Monitor

The CML is a portable, accurate instrument-suitable for 'on-site' applications. It can automatically measure and display particulate contamination, moisture and temperature levels in various hydraulic fluids.

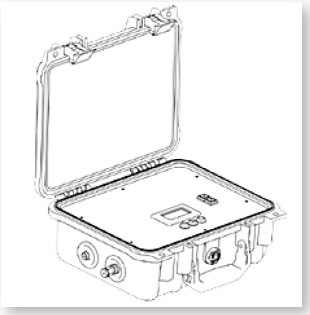

> Features & Benefits

- Compact
- Light and portable
- Mains Operated/battery (if fitted)
- Full Calibration based on ISO11171
- Measures and displays the following international standard formats: ISO 4406:2017, NAS 1638, AS 4059E and ISO 11218
- Data logging and 600 test result memory
- Manual and remote control flexibility

Scope of Supply

- 1 x CML2 (Specific model will be as per ordered item)
- 1 x M16x2 microbore pressure hose, 1500mm long
- 1 x Quick release waste hose for LPA2
- 1 x 1L waste receptacle
- 1 x 12V, 2A power adapter c/w UK/EU/US/AUS/CN heads
- 1 x 9 pin serial cable
- 1 x USB to serial converter
- 1 x Hard copy of product user guide
- 1 x Digital copy of user guides/software/drivers
- 2 x Hard copy of calibration certificate
- 1 x Carry bag

See Accessories at page 83.

Front facing view

Right facing view

Closed case
Right facing view

Closed case
Left facing view

Technical data

Technology
Twin laser and twin optical diode detectors Based Light Extinction Automatic Optical Contamination Monitor

Particle Sizing
>4, 6, 14, 21, 25, 38, 50, 70 $\mu m_{(c)}$ to ISO 4406:2017 Standard

Analysis range
ISO 4406:2017 Code 8 to 24
NAS 1638 Class 2 to 12
AS4059 Rev. E Table 1 Size Codes 2-12
AS4059 rev E, Table 2 Size Codes, A:000 to 12, B:00 to 12, C:00 to 12, D:2 to 12, E: 4 to 12,F: 7 to 12

Accuracy
Better than 3% typical

Calibration
Each unit individually calibrated with ISO Medium Test Dust (MTD) based on ISO 11171, on equipment certified by I.F.T.S. To ISO 11943

Viscosity range
Up to 400 cSt

Fluid temperature
From +5 °C to +80 °C

Ambient Temperature
From -10 °C to +60 °C

Temperature Measurement
±3 °C

Pressure
Minimum: 2 bar
Maximum: 400 bar

Sample Volume / Test time
8 ml. (short): 2:50
15 ml. (normal): 5:00
30 ml. (dynamic): 10:00
24 ml. (bottle sampler): 8:00
15 ml. (continuous): 5:00

Data Storage
600 tests

Communication options
RS232 9 pin D plug

Environmental Protection
IP51 (lid open)

Moisture Sensing
% RH (Relative Humidity) ±3%

Weight
6 kg

Electrical Supply
Voltage 9-36V DC

Power
Internal rechargeable battery (series 41)

Outer Casing Finish
Injection Molded Ultra High Impact structural copolymer

Wetted parts
M - C46400 Cu alloy, 316 stainless steel, FPM, FR4, sapphire.
N - 316 stainless steel, FPM, sapphire.
S - 316 stainless steel, perfluoro elastomer, sapphire, EPDM.

Software
LPA View software (included)

FOCUS ON

Exclusive MP Filtri technology
The combination of the two lasers with the unique optics and photodiode package enables the CML2 to give increased accuracy combined with excellent repeatability.

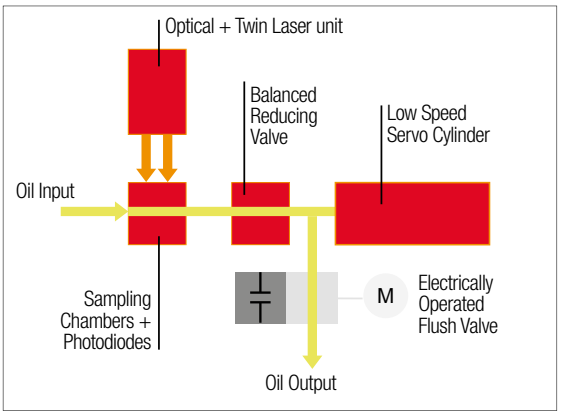

Laser 1
A single point high accuracy laser measures particles of contamination at 4 µm(c) and 6 µm(c) giving increased accuracy with excellent repeatability.

Laser 2
Standard accuracy laser specifically designed for system contaminants between 6 µm(c) and 70 µm(c).

Option W
Water Saturation level (RH%) and fluid temperature sensor option.

Option P
Live reading of pressure (bar) on screen.

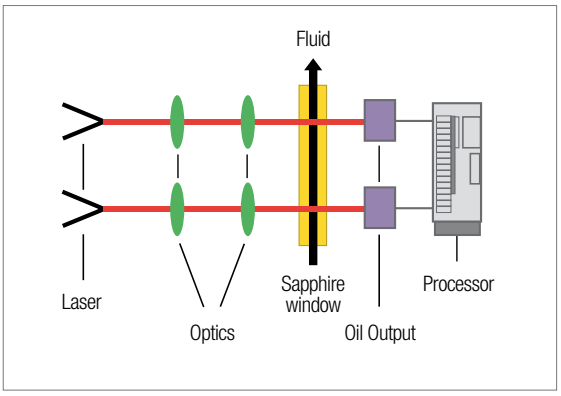

LPA View Software

The LPA View software is used with the LPA3, LPA2, CML2 and ICM particle counters. When connected to LPA View, MP Filtri CMPs can transfer results in realtime, or alternatively, historical results can be downloaded from the CMP's inbuilt memory.

- Runs on Windows XP, 7, and Windows 10
- Full adjustment & control of product settings, test times and alarms
- Easy test report generation
- Trend analysis
- Graphical display options
- Universal format across our contamination monitoring product range

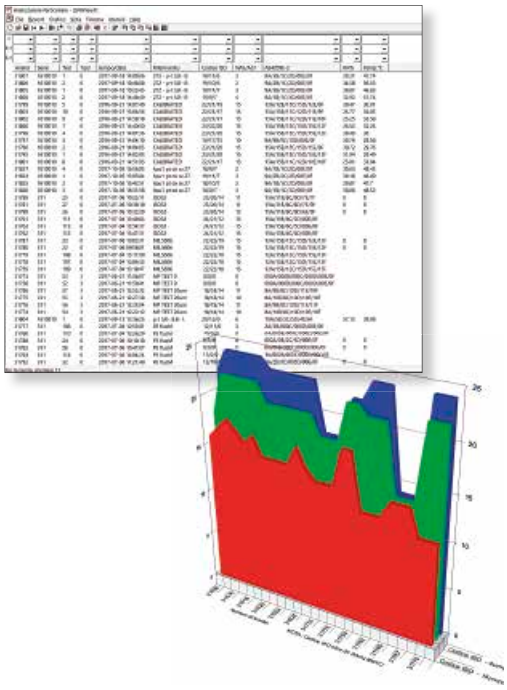

Dimensions

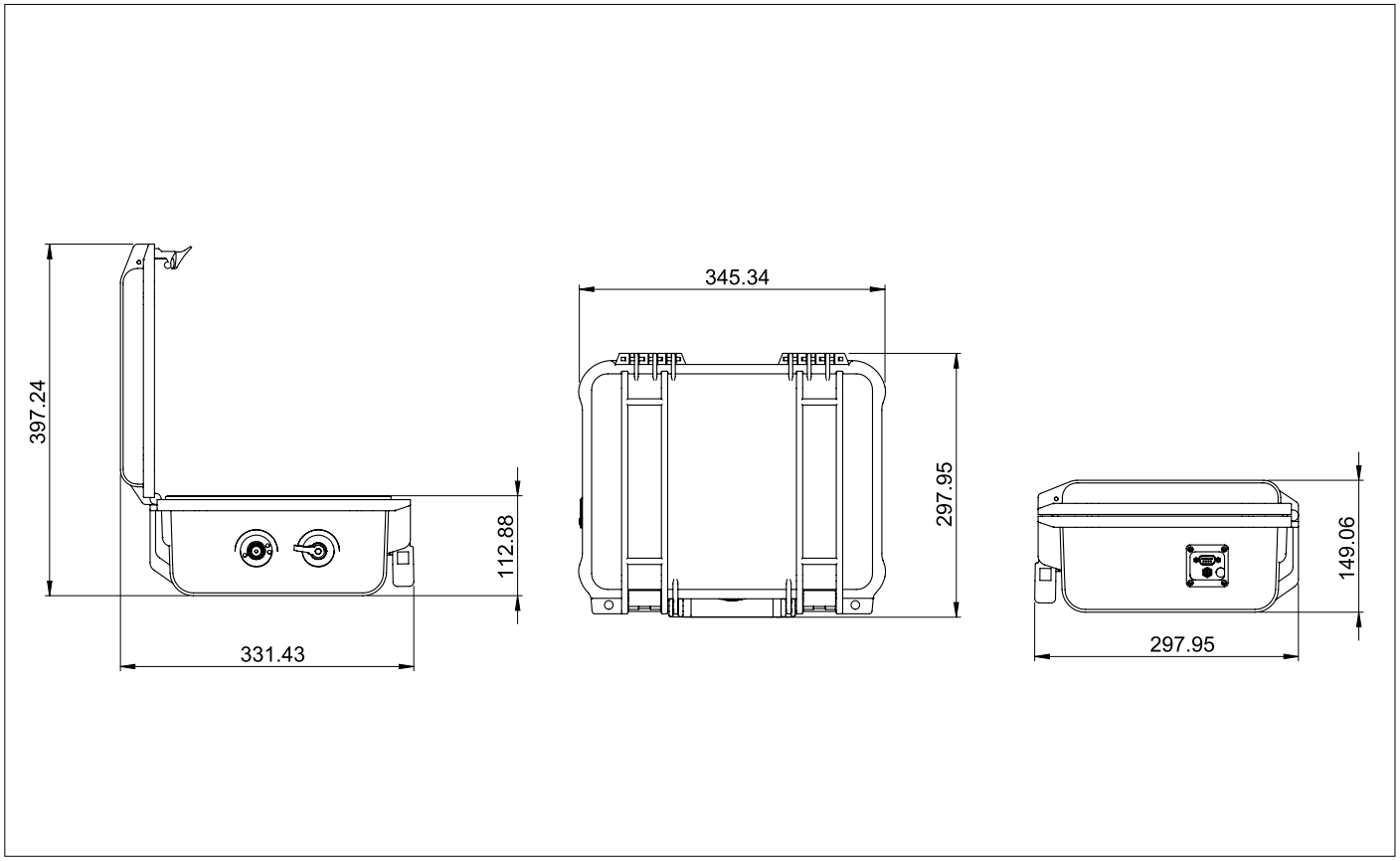

Designation & Ordering code

AUTOMATIC PARTICLE COUNTER CML2

Configuration example: CML2 | W | M | S | X | 41

Series

CML2 Compact twin laser contamination monitor

Moisture Sensor (RH%)

0 Without moisture and temperature sensor
W With moisture and temperature sensor

Fluid compatibility

M Mineral / synthetic oil
N Subsea fluids and water based fluids (*)
S Phosphate ester and aggressive fluids (*)

Option

S Standard units

Option bottle sampler

X Without bottle sampling

Series

41 With display and push buttons, with internal rechargeable battery

(*) **N** and **S** version, moisture sensor (W) not available

ICM 2.0

In-Line Contamination Monitor

ICM 2.0 GENERAL INFORMATION

Description

Automatic Particle Counters

In-Line Contamination Monitor

The ICM 2.0 automatically measures and displays particulate contamination, moisture and temperature levels in various hydraulic fluids.
It is designed specifically to be mounted directly to systems, where ongoing measurement or analysis is required, and where space and costs are limited.

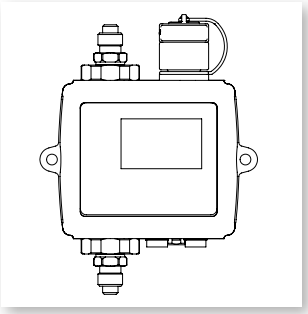

> Features & Benefits

- 8 channel contamination measurement & display
- Measures and displays the following international standard formats: ISO 4406:2017, NAS 1638, AS 4059E
- Moisture and temperature sensing fluid dependent
- Data logging and 4000 test result memory
- Manual, automatic and remote control flexibility
- Multicolour indicators via LCD (K versions) and LED with output alarm signals as standard
- Robust die cast aluminium construction
- LPA View software (included)
- Pressure max. 420 bar
- Environmental protection IP65/67 versatile
- Secondary connector to allow the simultaneous control/download of results during operation
- Option available to download all results onto a USB stick, direct from the ICM
- 4-20mA analogue output as standard

Scope of Supply

- 1 x ICM 2.0 (Specific model will be as per ordered item)
- 1 x 3m Twisted Pair Cable Assembly
- 1 x Hard copy Quick start/wiring installation guide
- 1 x Hard copy Fluid Condition Handbook
- 1 x Digital copy of user guides/software/drivers
- 1 x Hard copy of calibration certificate

See Accessories at page 83.

Status LED

All ICM 2.0 versions have a multicolour indicator on the front panel, which is used to indicate the status or alarm state. ICM-K versions also have a screen that changes colour. The alarm thresholds can be set from LPA-View via the serial interface.

Screen and multicolor indicators

- Green indicates that the test result passed, i.e. none of the alarm thresholds were exceeded
- Yellow indicates that the lower cleanliness limit was exceeded, but not the upper one
- Red indicates that the upper clean liness limit was exceeded
- Blue indicates that the upper water content limit was exceeded
- Red/Blue Alternating indicates both cleanliness and water content upper limits exceeded
- Violet indicates that the upper temperature limit was exceeded

Left facing view

Right facing view

Top view with USB port

Bottom view

Technical data

Technology
LED Based Light Extinction Automatic Optical Contamination Monitor

Particle Sizing
>4, 6, 14, 21, 25, 38, 50, 70 $\mu m_{(c)}$ to ISO 4406:2017 Standard

Analysis range
ISO 4406:2017 Code 0 to 25
NAS 1638 Class 00 to 12
AS4059 Rev. E Table 1&2 Sizes A-F: 000 (Lower Limits are Test Time dependent)

Accuracy
± ½ code for 4,6,14 $\mu m_{(c)}$ ± 1 code for larger sizes

Calibration
Each unit individually calibrated with ISO Medium Test Dust (MTD) based on ISO 11171, on equipment certified by I.F.T.S. ISO 11943

Operating Flow Rate
20 - 400 ml/minute

Viscosity range
≤ 1000 cSt

Fluid temperature
From -25 °C to +80 °C

Ambient Temperature
From -25 °C to +80 °C (non K version)
From -25 °C to +55 °C (K version)

Temperature Measurement
±3 °C

Pressure
Maximum: 420 bar

Test time
Adjustable 10 - 3600 seconds. Factory set to 120 seconds.
Start delay & programmable test intervals available as standard

Flow rate measurement
Indicator only

Data Storage
4000 tests

Communication options
RS485, MODBUS, CANBUS, 4-20mA time multiplex as standard

Relays
Two solid state relays fitted to “R” version for output to alarm circuits

Environmental Protection
IP 65/67 versatile IK04 Impact Protection

Moisture Sensing
% RH (Relative Humidity) ±3%

Weight
1.6 kg

Electrical Supply
Voltage 9-36V DC

Power consumption
<2.2 W

Outer Casing Finish
Polyurethane BS X34B. Colour BS381-638 (Dark Sea Grey)
Industry 4.0 ready with appropriate accessory product

Wetted parts
M - C46400 Cu alloy, 316 stainless steel, FPM, FR4, sapphire.
N - 316 stainless steel, FPM, sapphire.
S - 316 stainless steel, perfluoro elastomer, sapphire, EPDM.

Software
LPA View software (included)

LPA View Software

The LPA View software is used with the LPA3, LPA2, CML2 and ICM particle counters. When connected to LPA View, MP Filtri CMPs can transfer results in realtime, or alternatively, historical results can be downloaded from the CMP's inbuilt memory.

- Runs on Windows XP, 7, and Windows 10
- Full adjustment & control of product settings, test times and alarms
- Easy test report generation
- Trend analysis
- Graphical display options
- Universal format across our contamination monitoring product range

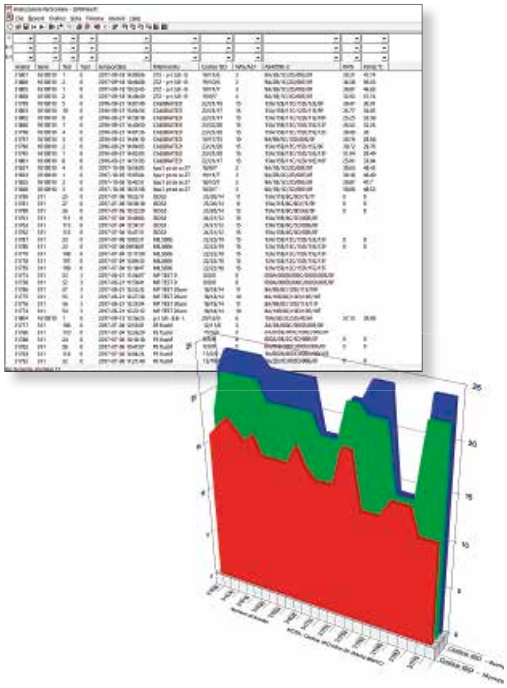

Hydraulic Circuit

TYPICAL PRESSURE LINE

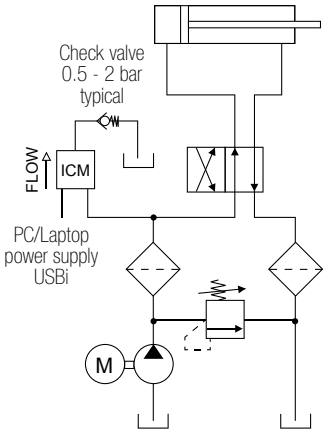

TYPICAL RETURN LINE

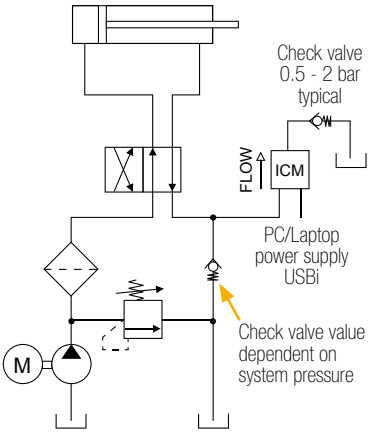

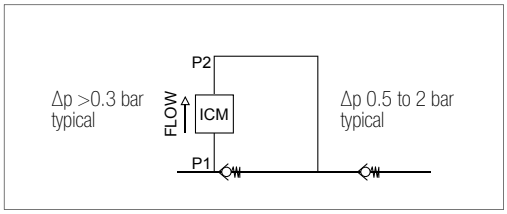

For installation guidance please visit www.mpfiltri.co.uk/ICM-2_0/#Home

Dimensions

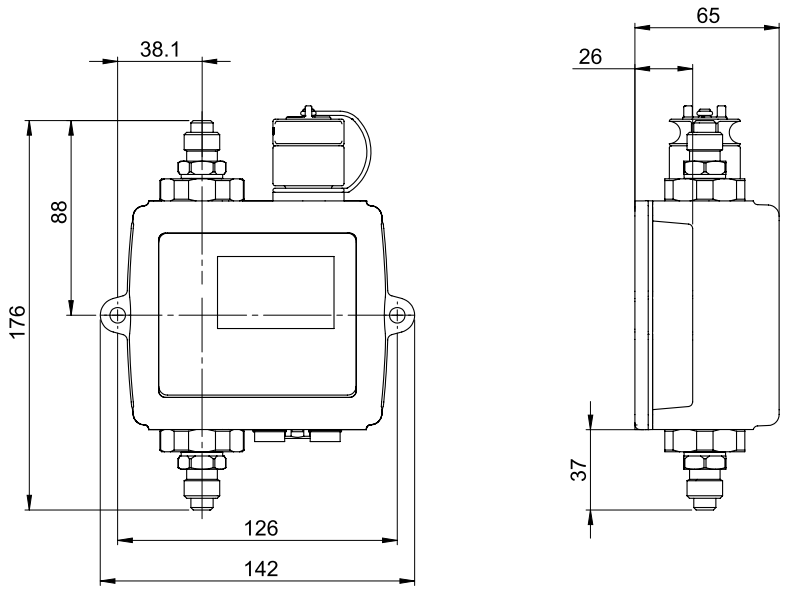

It is important to ensure a 0.5 - 2 bar differential across the ICM 2.0

The ICM 2.0 can be used as a standalone product or can be controlled by external PC, PLC or the ICMRDU2.0 (Remote Display Unit. 10m control cable supplied as standard).

Designation & Ordering code

AUTOMATIC PARTICLE COUNTER ICM 2.0

Configuration example: ICM | W | M | K | R | G1 | 2.0

Series

ICM In-Line Contamination Monitor

Moisture Sensor (RH%)

0 Without moisture and temperature sensor
W With moisture and temperature sensor

Fluid compatibility

M Mineral/synthetic oils
N Subsea fluids and water based fluids (*)
S Phosphate ester and aggressive fluids (*)

Keypad / Display

0 Without keypad / display
K With keypad / display

Device output

R With relays / external alarm outputs
U Test record transfer (direct to USB stick) plus relays/external alarm outputs

Connections

G1 ICM complete with M16 x 2 pressure test point connections fitted
G3 1/4” BSP - Female port
G4 7/16” UNF - Female port

Series

2.0

(*) **N** and **S** version, moisture sensor (W) not available

AZ2

ATEX Fluid Contamination Monitors

Description

Particle Counters

Atex Zone 2, Cat 3G, Fluid Contamination Monitors

Our AZ2 contamination monitor can automatically measure and save particulate contamination, moisture and temperature levels in various hydraulic fluids. They are designed specifically to be mounted directly to systems where ongoing measurement or analysis is required in high risk or explosive environments.

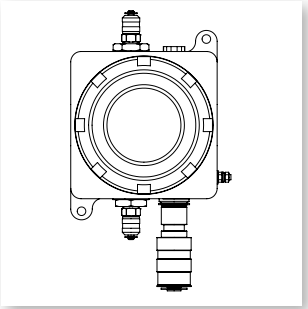

> Features & Benefits

- 8 channel contamination measurement & display
- Measures and displays the following international standard formats: ISO 4406:2017, NAS 1638, AS 4059E
- RS485, MODBUS, CANBUS
- Moisture and temperature sensing fluid dependent
- Data logging and 4000 test result memory
- Automatic and remote control flexibility
- Multicolour indicators via onboard LED with output alarm signals as standard
- LPA View software (included)

Scope of Supply

1 x ICMKAZ2 (*)
1 x Atex approved non wired cable connector and gland
1 x Hard copy Fluid Condition Handbook
1 x Digital copy of user guides/software/drivers
1 x Hard copy of calibration certificate
1 x Hard copy of atex certificate

(*) Specific model will be as per ordered item

See Accessories at page 83.

Status LED

All AZ2 versions have a multicolour indicator on the front panel, which is used to indicate the status or alarm state. The alarm thresholds can be set from LPA-View via the serial interface and bespoke connector (available on request).

Multicolor indicators

- Green indicates that the test result passed, i.e. none of the alarm thresholds were exceeded
- Yellow indicates that the lower cleanliness limit was exceeded, but not the upper one
- Red indicates that the upper clean liness limit was exceeded
- Blue indicates that the upper water content limit was exceeded
- Red/Blue Alternating indicates both cleanliness and water content upper limits exceeded
- Violet indicates that the upper temperature limit was exceeded

Front facing view

Right facing view

Top facing view

Bottom facing view

Technical data

Technology
LED Based Light Extinction Automatic Optical Contamination Monitor

Particle Sizing
>4, 6, 14, 21, 25, 38, 50, 70 $\mu m_{(c)}$ to ISO 4406:2017 Standard

Analysis range
ISO 4406:2017 Code 0 to 25
NAS 1638 Class 00 to 12
AS4059 Rev. E Table 1&2 Sizes A-F: 000 to 12
ISO 11218 00-12 (Lower Limits are Test Time dependent)

Accuracy
± ½ code for 4,6,14$\mu m_{(c)}$ ± 1 code for larger sizes

Calibration
Each unit individually calibrated with ISO Medium Test Dust (MTD) based on ISO 11171, on equivalent certified by I.F.T.S. ISO 11943

Operating Flow Rate
20 - 400 ml/minute

Viscosity range
≤ 1000 cSt

Fluid temperature
From -25 °C to +80 °C

Ambient Temperature
From -25 °C to +80 °C

Temperature Measurement
±3 °C%

Pressure
Maximum: 400 bar (for high frequency pressure pulse and out range temperature applications contact MP Filtri)

Test time
Adjustable 10 - 3600 seconds. Factory set to 120 seconds.
Start delay & programmable test intervals available as standard

Flow rate measurement
Indicator only

Data Storage
4000 tests

Communication options
RS485, RS232, MODBUS, CANBUS as standard

Relays
Two solid state relays fitted to “R” version for output to alarm circuits

Environmental Protection
IP66

Moisture Sensing
% RH (Relative Humidity) ±3%

Weight
10.5 kg

Electrical Supply
Voltage 9-36V DC

Current Supply
12V - 150mA
24V - 80mA
36V - 60mA

Power consumption
<2.2 W

Outer Casing Finish
Stainless Steel

Wetted parts
M - C46400 Cu alloy, 316 stainless steel, FPM, FR4, sapphire.
N - 316 stainless steel, FPM, sapphire.
S - 316 stainless steel, perfluoro elastomer, sapphire, EPDM.

Software
LPA View software (included)

Atex classification
CE Ex 3 G EX nR IIB T5 GC IP66

ICM AZ2 cable wiring details
MP Filtri do not supply an ATEX approved cable with the ICM AZ2 products as customers may run such cables through varying ATEX zones. Wiring diagrams supplied, please consult product user guide for full information.
Note: an adapter cable and ICMUSBi product will be required should LPA View be utilised as the control software. These accessories are only suitable for use outside of the zoned areas

Dimensions

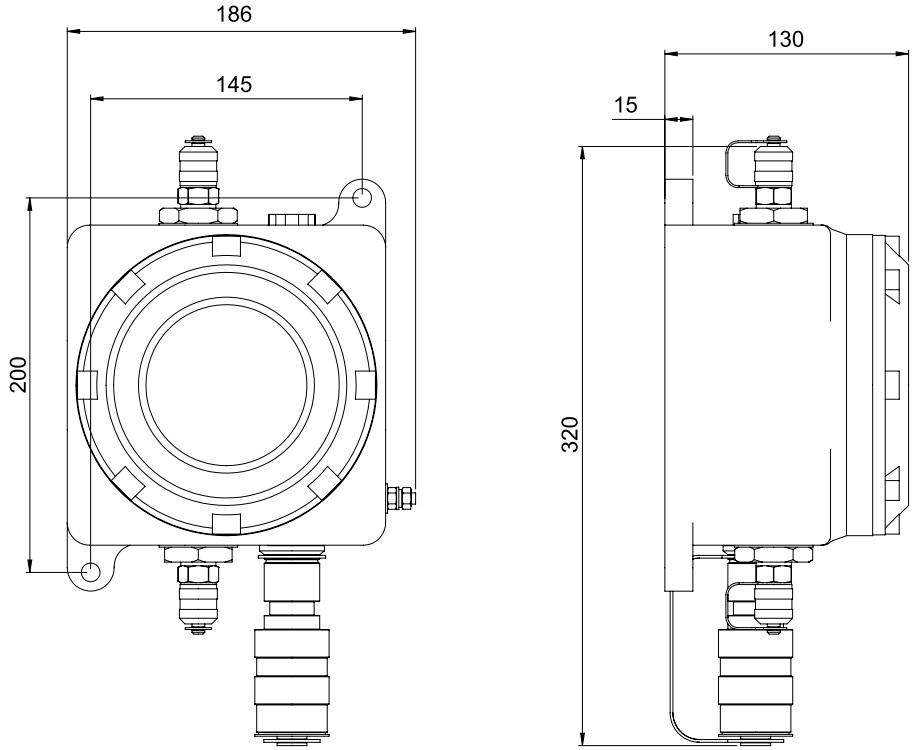

Designation & Ordering code

AUTOMATIC PARTICLE COUNTER AZ2

Configurations :

ICM	W	M	K	R	G1	AZ2	Moisture Sensor, Mineral / Petroleum based fluids, LCD Display, Relays, M16 x 2 Minimess Connections
ICM	O	M	K	R	G1	AZ2	Mineral / Petroleum based fluids, LCD Display, Relays, M16 x 2 Minimess Connections
ICM	O	N	K	R	G1	AZ2	Off shore / Water based fluids, LCD Display, Relays, M16 x 2 Minimess Connections
ICM	O	S	K	R	G1	AZ2	Phosphate Ester and aggressive fluids, LCD output, Relays, M16x2 Minimess Connections

All of MP Filtri's AZ2 products are designed to be run via PLC control & the Modbus communication protocol.
Note: All units are fully compatible with and can be programmed via our bespoke windows based LPA View software.

ICU

In-line Contamination Monitoring Unit

Description

Automatic Particle Counters

In-line Contamination Monitoring Unit

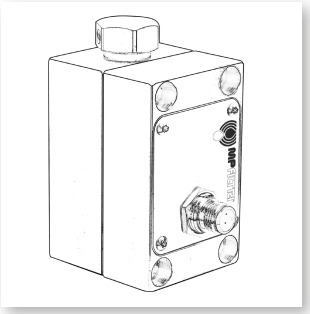

The ICU automatically measures particulate contamination levels in various hydraulic fluids and is designed for industrial applications.
It is designed to be manifold mounted directly to systems, where ongoing measurement or analysis is required, and where space and costs are limited.

> Features & Benefits

- Manifold mounting
- 3 channel contamination measurement
- Measures ISO 4406:2017
- Robust design and construction
- Pressure max. 350 bar
- Environmental protection IP65/67 versatile
- 4-20mA analogue output as standard

Scope of Supply

- 1 x ICU0M00G5P01
- 1 x Installation kit:
  - 4 x M6x1.0x60mm long fixing bolts
  - 2 x 6.50 ID x 1.5 CSD FKM o-ring seals
- 1 x Hard copy of calibration certificate

Right facing view

Front / Left facing view

Technical data

Technology
LED Based Light Extinction Automatic Optical Contamination Monitor

Particle Sizing
>4, 6, 14 $\mu m_{(c)}$ to ISO 4406:2017 Standard

Analysis range
ISO 4406:2017 Code 0 to 20

Accuracy
± ½ code for 4,6,14 $\mu m_{(c)}$ across the analysis range

Calibration
Each unit individually calibrated with ISO Medium Test Dust (MTD) based on ISO 11171, on equipment certified by I.F.T.S. ISO 11943

Operating Flow Rate
200 ml/minute controlled by the built in flow control valve

Viscosity range
≤ 1000 cSt

Fluid temperature
From 0 °C to +80 °C

Ambient Temperature
From 0 °C to +60 °C

Pressure
Minimum: 50 bar
Maximum: 350 bar

Test time
Adjustable 10 - 3600 seconds

Communication options
4-20 mA time multiplex as standard

Environmental Protection
IP 65/67 versatile

Weight
1.4 Kg

Electrical Supply
24v DC +/- 20%

Power consumption
<2.2 W

Cable
Electrical cable has to be ordered separately (optional accessory), MP Filtri item no. 13.061000 - ICU Cable M12 4 pin 1.5m long.

Dimensions

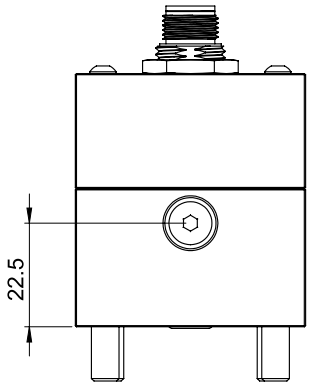

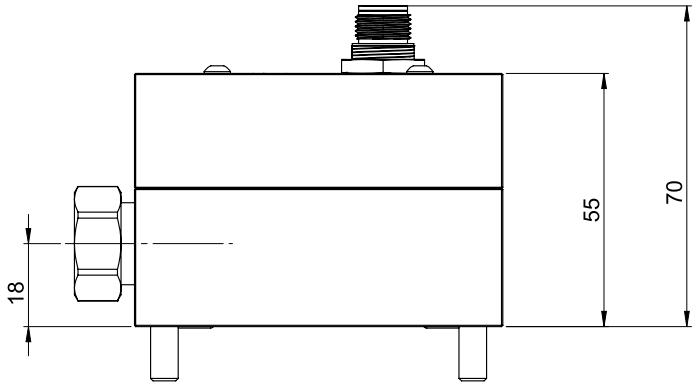

REQUIRED SURFACE
FINISH OF MATING PIECE

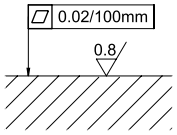

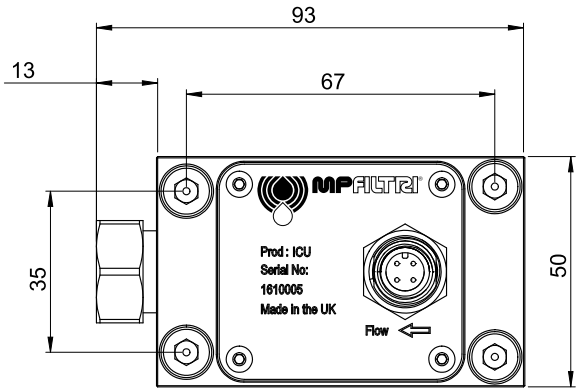

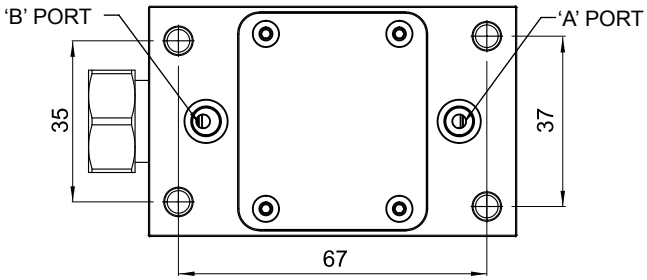

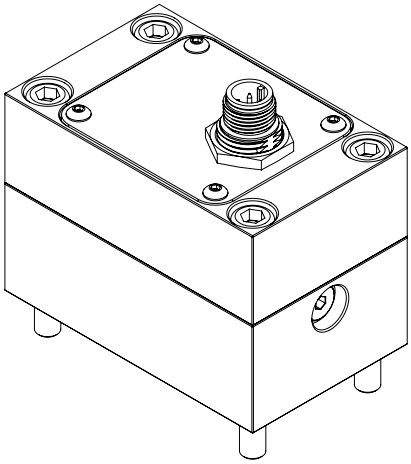

MOUNTING INTERFACE

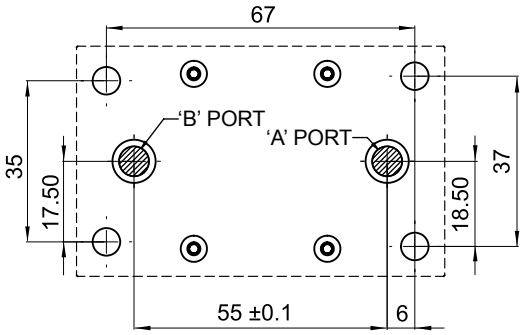

Designation & Ordering code

AUTOMATIC PARTICLE COUNTER ICU

Configurations :

ICU	0	M	0	0	G5	P01	Without moisture sensor, Mineral oil, Without keypad/display, 4 to 20mA timed multiplex, Manifold mounted, Standard option
ICU	0	M	0	0	G5	Pxx	Customized version

ACMU

Auxiliary Contamination Monitoring Unit

Description

Automatic Particle Counters

Auxiliary Contamination Monitoring Unit

Incorporating the ICM, the ACMU is specifically designed for aerated, viscous and/or un-pressurized hydraulic/lubrication systems.

Where can it be used?
- Wind/Tidal/Wave Energy
- Gearbox applications
- Gearbox monitoring
- Offshore & ship systems
- Lubrication & Oil systems
- Mobile Equipment
- Test Benches

When should it be used?
- Entrained air or turbulent flows
- Higher viscosity fluids
- Unpressurized systems

Why should it be used?
- Easy to retro-fit
- Exceptional communication & 4000 test memory
- Reliable & accurate performance

Available versions:
- Cabinet version
- Plate version

Scope of supply
- 1 x ACMU (Specific model will be as per ordered item, 1/4" BSP inlet/outlet ports as standard)
- 1 x 3m Twisted Pair Cable Assembly (Plate version)
- 1 x 5m length twisted pair cable (Cabinet version)
- 2 x 1/4" BSP to 7/16 JIC coupling
- 1 x Hard copy Quick start/wiring installation guide
- 1 x Hard copy Fluid Condition Handbook
- 1 x Digital copy of user guides/software/drivers
- 1 x Hard copy of calibration certificate

See Accessories at page 83.

Hydraulic Hoses (External)
Customer to source their own

Re-calibration
Defined by customer Quality Controls recommended 1 year

Closed Cabinet version
Front/Right facing view

Open Cabinet version
Front facing view

Plate version
Front facing view

Technical data

In-Line contamination monitor
ICM with keypad and backlit display and relays

Particle Sizing
As ICM: >4, 6, 14, 21, 25, 38, 50, 70 $\mu m_{(c)}$ to ISO 4406:2017 Standard

Fluid Compatibility / Corrosion Resistance
Hydrocarbon based & Synthetic hydraulic fluids

Circuit Flow Rate
40 ml/min to 400 ml/min

Viscosity range
Max. 1000 cSt - Min. 10 cSt

Communication Options
PLC compatible. RS485, RS232 & CanBus (J1939 typical)

Fluid Temperature (Start Up)
Minimum: Viscosity dependant. Not greater than 1000 cSt
Maximum: +80 °C

Fluid Temperature (Continuous)
Minimum: Viscosity dependant. Not greater than 1000 cSt
Maximum: +80 °C

Ambient Temperature (Start Up)
From -40°C to +50 °C

Inlet Pressure
Min. Positive pressure - Max. 50 bar gauge pressure (pump option dependant)

Outlet Pressure
Min. Atmosphere (1013mbar at sea level) - Max. 3 bar (gauge pressure)

Moisture Sensing (RH%)
Available with or without moisture sensor

Weight
21 Kg (cabinet version) - 13 Kg (plate version)

Electric Motor
110V AC, 230V AC, 415V AC, 690V AC

Power Consumption
0.25 kW max

USBi Comms Junction Box
See USBi user guide - cabinet version
No junction box - plate version
Industry 4.0 ready with appropriate accessory product

LPA View Software

The LPA View software is used with the LPA3, LPA2, CML2 and ICM particle counters. When connected to LPA View, MP Filtri CMPs can transfer results in realtime, or alternatively, historical results can be downloaded from the CMP's inbuilt memory.

- Runs on Windows XP, 7, and Windows 10
- Full adjustment & control of product settings, test times and alarms
- Easy test report generation
- Trend analysis
- Graphical display options
- Universal format across our contamination monitoring product range

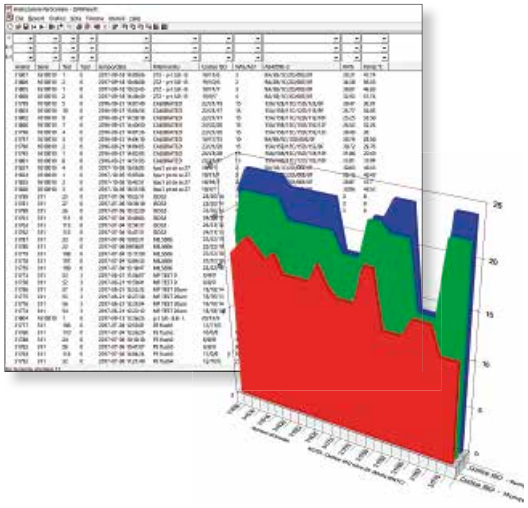

Type of applications

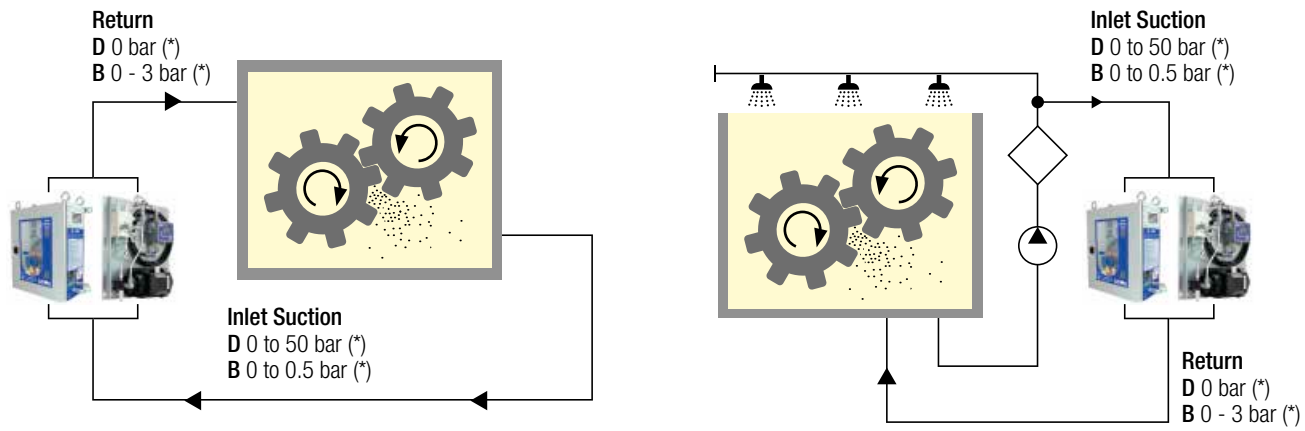

LIFTING EYES: Yes x 4 DIN 580, WLL 3400N at 45° (~340K)

LIFTING EYES: Yes x 2 WLL 16000N (~1600Kg)

(*) Gauge pressure

Designation & Ordering code

AUTOMATIC PARTICLE COUNTER ACMU

Configuration example: ACMU | W | D | C | S | 230V

Series

ACMU

Moisture Sensor (RH%)

0	Without moisture and temperature sensor
W	With moisture and temperature sensor

Pressure Sensor

D	Up to 50 bar inlet (gauge pressure), atmosphere outlet
B	0.5 (gauge pressure) {1 bar max inlet}, 3 bar (gauge pressure) max outlet

Type

C	Cabinet version (supplied with 5 metre communication lead)
P	Plate mounted version (supplied with ICM 3 metre cable)

Version

S	Standard version

Motor option

110V	110V Motor (Dual frequency 50Hz/60Hz, single phase)
230V	230V Motor (single phase)
400V	400V Motor (3 phase)
690V	690V Motor (3 phase)

PLATE VERSION

- Priming of pump prior to start up recommended
- Install below level of head of tank
- Keep hose length, inlet and outlet, to minimum lengths
- Max 1000cSt

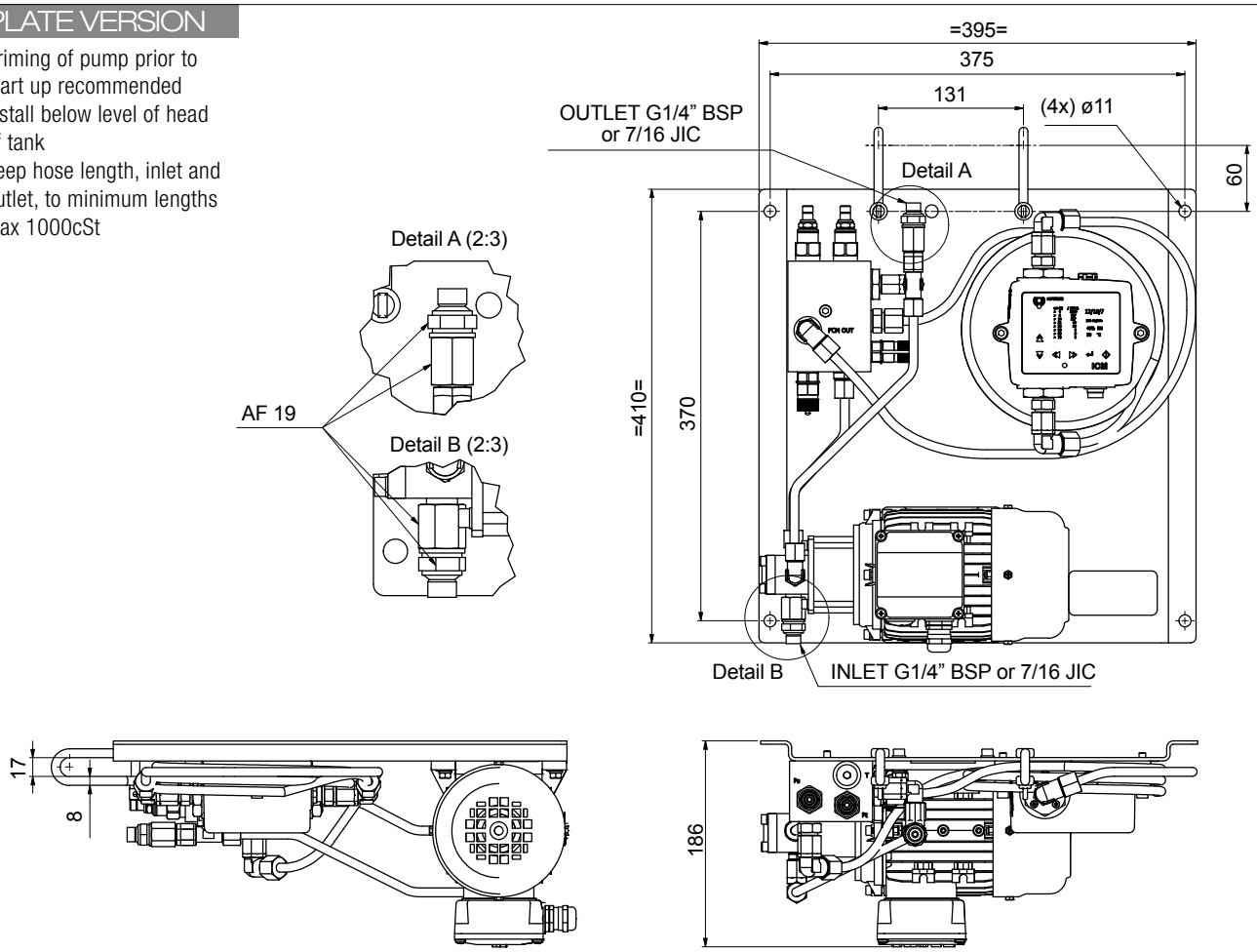

CABIN VERSION

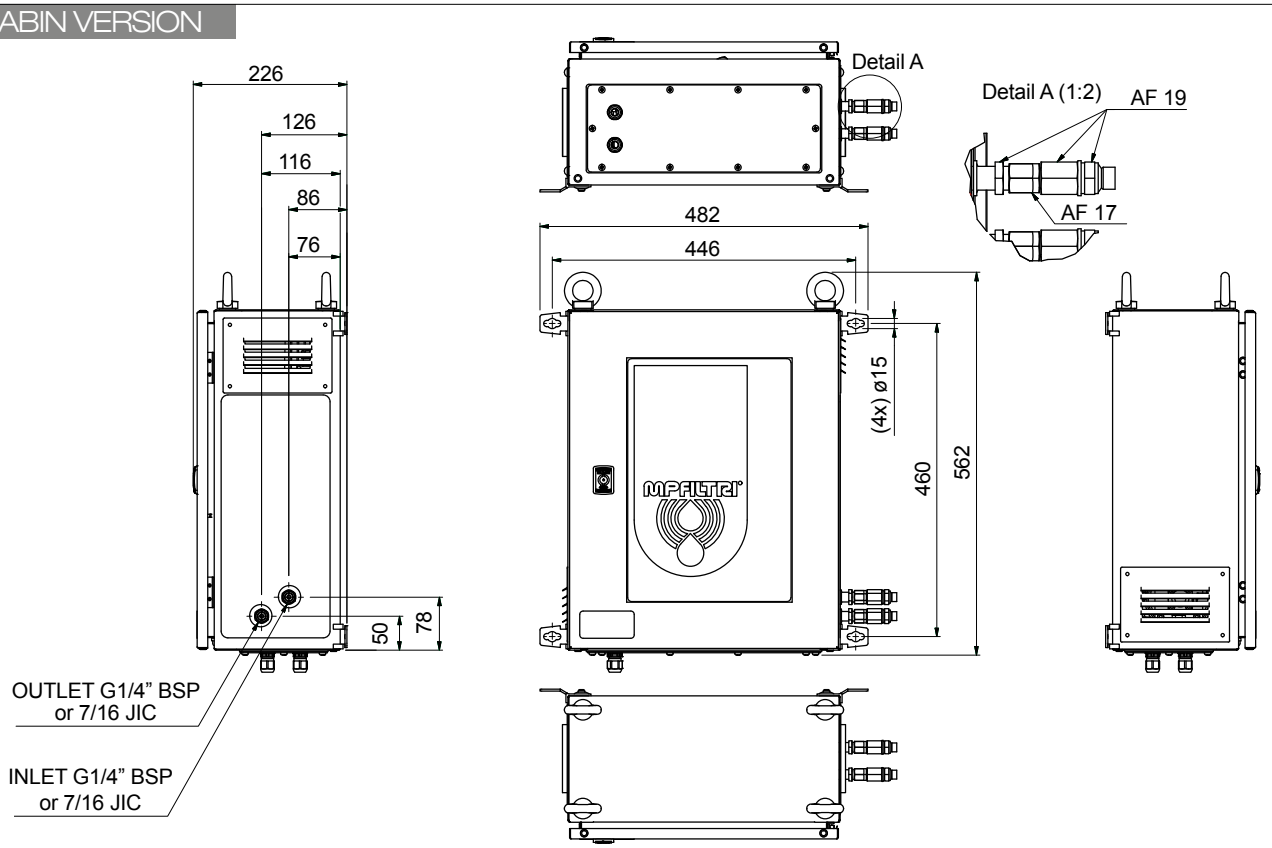

BS110 & BS500

Bottle Samplers - For use with MP Filtri's portable APC

Description

Automatic Particle Counters

Bottle Samplers

The 110ml bottle samplers are suitable for off-line and laboratory applications where fluid sampling at point of use is inaccessible or impractical.

A fluid de-aeration facility comes as standard.

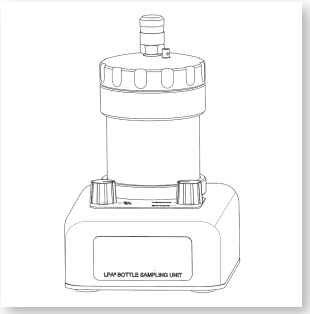

> Features & Benefits

- Vacuum feature for de-aeration of fluids
- Compatible with all portable MP Filtri Contamination Monitoring Products
- Strong Laboratory aesthetic
- Transparent outer for visual indication
- Full accessories kit included
- Includes carry case (BS110)
- Contact MP Filtri for use with fluids other than those stated

Scope of Supply

- 1 x 110ml Bottle Sampling unit
- 1 x Pressure cap
- 1 x Vacuum cap
- 1 x M16x2 microbore pressure hose, 600mm long
- 1 x 1L waste receptacle
- 1 x 12V, 2A power adapter c/w UK/EU/US/AUS/CN heads
- 1 x pack of disposable dip tubes
- 1 x hand pump
- 1 x length of hose for hand pump
- 3 x 100ml clear plastic bottles
- 1 x Hard copy of product user guide
- 1 x Digital copy of user guides/software/drivers
- 2 x Thermal printer paper
- 1 x Carry case

See Accessories at page 83.

Left facing view

Front facing view

Open case
Front facing view

Technical data

Max. Chamber Pressure
2.5bar (36.3psi) only

Min. Chamber Pressure
0.61bar (8.85psi) to 0.81bar (11.75psi)

For use with….
MP Filtri Portable Contamination Monitoring Products

Supply Voltage
12v, 2 amp

Wetted Parts (Internal)
Aluminium HE30, 303 Stainless Steel, Polyurethane, FPM, Acrylic

On/off & Stop/Start signals
Switch (Manual Operation)

Hydraulic Hoses (External)
600mm x 2mm ID Microbore minimess hose

Max Flow Rate (ml/min)
Viscosity dependant

Min Flow Rate (ml/min)
Viscosity dependant

Visual Pressure Indicator
No

Weight
7kg

Pressure Gauge
No

Pressure Ranges
2.0bar (29psi) options

IP Rating
IP50

Fluid Compatibility / Corrosion Resistance
Industrial Hydrocarbon based fluids (typical)

Min Outlet Pressure
1013mbar (14.7psi)

Max. Fluid Temperature (Continuous)
80°C/176°F

Min Fluid Temperature
Viscosity dependant

Max. Viscosity
400 cSt

Min. Viscosity
1 cSt

Max outlet pressure
2.0bar (29psi) options

Min. Continuous Ambient Temperature
10°C/50°F

Max. Continuous Ambient Temperature
55°C/131°F

Power Consumption
24W

Warranty
12 months

Installation
Indoor Use / Laboratory Use

Connection to use with Particle Analyser

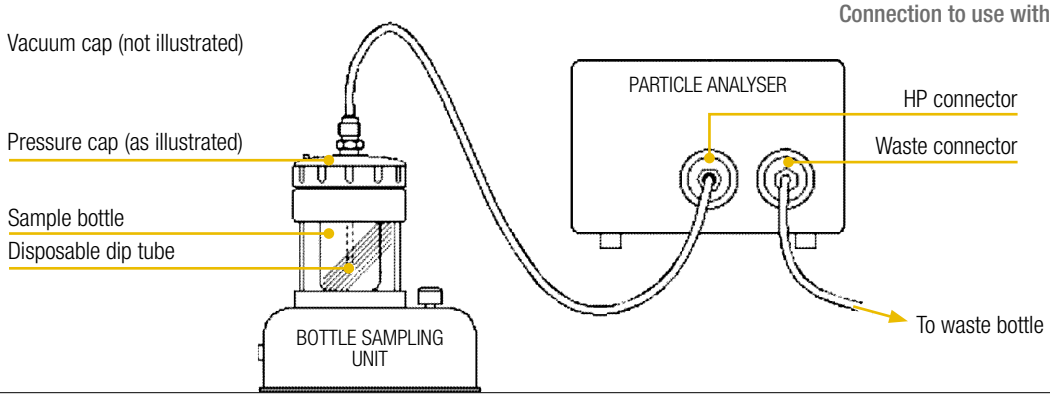

Dimensions

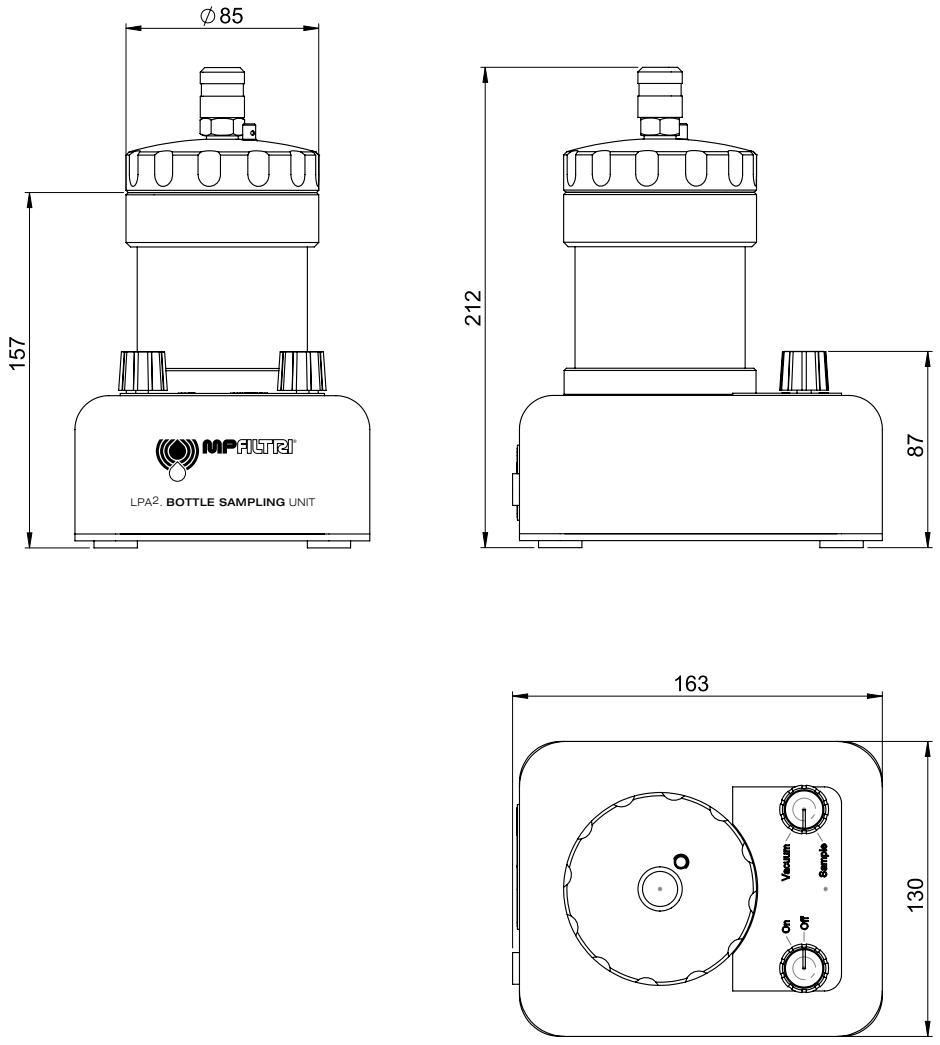

Designation & Ordering code

BOTTLE SAMPLER BS110

Configuration example: BS110 | M | 0 | 0

Series

BS110 110ml fluid volume

Fluid compatibility

M Mineral oil and synthetic fluids

Pressure rating

0 2 bar

Pressure cylinder option

0 Acrylic cylinder assembly

Description

Automatic Particle Counters

Bottle Samplers

The 500ml bottle samplers are suitable for off-line and laboratory applications where fluid sampling at point of use is inaccessible or impractical.

A fluid de-aeration facility comes as standard.

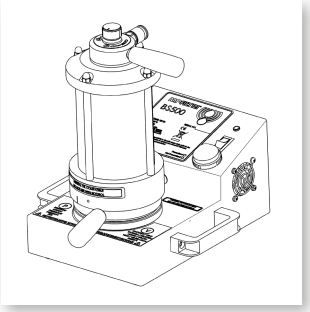

> Features & Benefits

- Vacuum feature for de-aeration of fluids
- Compatible with all portable MP Filtri Contamination Monitoring Products
- Strong Laboratory aesthetic
- Transparent outer for visual indication
- Full accessories kit included
- Contact MP Filtri for use with fluids other than those stated

Scope of Supply

- 1 x 500ml Bottle Sampling base unit (*)
- 1 x Top cap, pressure/vacuum chamber (*)
- 1 x M16x2 microbore pressure hose, 600mm long
- 1 x Power adapter
- 1 x UK/EU/US/AUS/CN power lead*
- 3 x 210ml clear glass bottles
- 2 x 500ml clear glass bottles
- 1 x Digital copy of user guides/software/drivers

(*) Specific model will be as per ordered item

See Accessories at page 83.

Front / Left facing view

Front / Right facing view

Back / Right facing view

Back / Left facing view

Technical data

Max. Chamber Pressure
2.5bar (36.3psi) (standard), 4.5bar (65.3psi) (high pressure)

Min. Chamber Pressure
0.61bar (8.85psi) to 0.81bar (11.75psi)

For use with….
MP Filtri Portable Contamination Monitoring Products

Supply Voltage
12v, 5 amp

Wetted Parts (Internal)
Aluminium 6082 T6, 303 Stainless Steel, 316 Stainless Steel.
Seal & Cylinder material optional

On/off & Stop/Start signals
Switch (Manual Operation)

Hydraulic Hoses (External)
600mm x 2mm ID Microbore minimess hose

Max Flow Rate (ml/min)
Viscosity dependant

Min Flow Rate (ml/min)
Viscosity dependant

Visual Pressure Indicator
Yes

Weight
9kg

Pressure Gauge
Yes (only on 4.5bar version)

Pressure Ranges
4.5bar (65.3psi) or 2.5bar (36.3psi) options

IP Rating
IP50

Fluid Compatibility / Corrosion Resistance
Industrial, aerospace & off-shore control fluids (typical)

Min Outlet Pressure
1013mbar (14.7psi)

Max. Fluid Temperature (Continuous)
80°C/176°F

Min Fluid Temperature
Viscosity dependant

Max. Viscosity
Not greater than 400cSt (on 2.5bar version)
Not greater than 1500cSt (on 4.5bar version)

Min. Viscosity
1 cSt

Max outlet pressure
Version dependant: 2.5bar (36.3psi) for 0 version
4.5bar (65.3psi) for H version

Min. Continuous Ambient Temperature
10°C/50°F

Max. Continuous Ambient Temperature
55°C/131°F

Power Consumption
60W

Warranty
12 months

Installation
Indoor Use / Laboratory Use

Connection to use with Particle Analyser

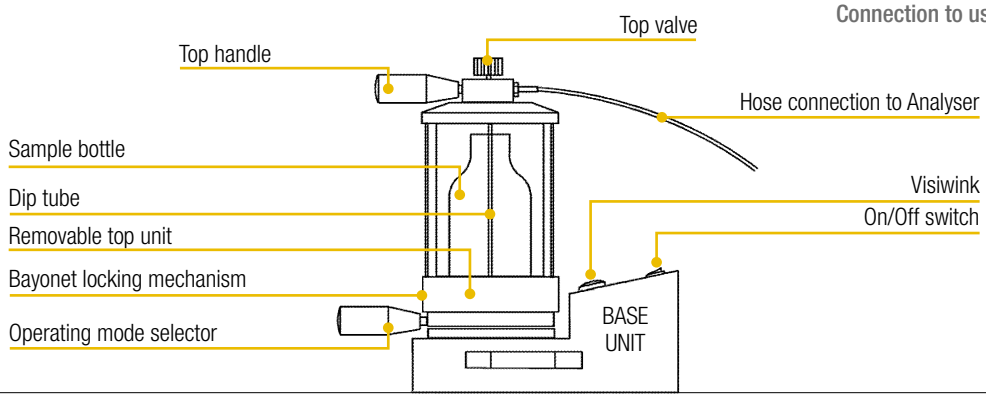

Dimensions

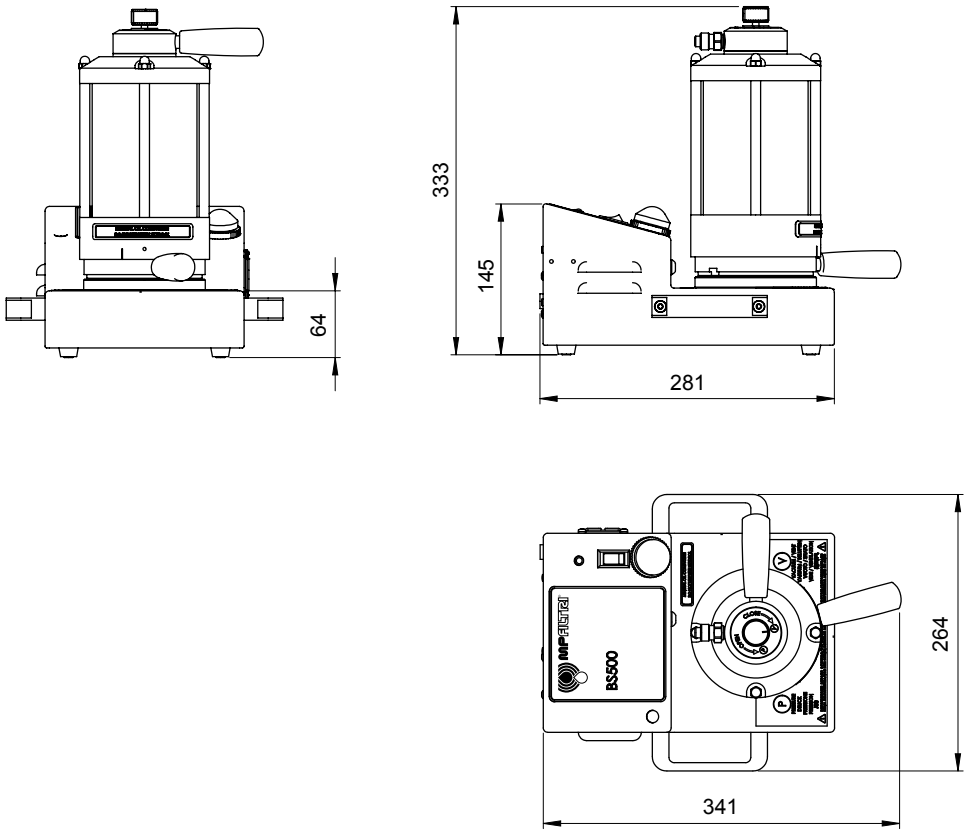

Designation & Ordering code

BOTTLE SAMPLER BS500

Configuration example: BS500 | V | 0 | 0 | UK

Series

BS500	500ml fluid volume

Fluid compatibility

V	Mineral oil and synthetic fluids, Subsea and water based fluids
E	Phosphate ester and aggressive fluids
S	Phosphate ester and aggressive fluids, Mineral oil and synthetic fluids, Subsea and water based fluids

Pressure rating

0	2 bar, standard option
H	4 bar, high pressure option (*)

Pressure cylinder option

0	Acrylic cylinder assembly
S	Glass cylinder assenbly (**)

Power adapter options

UK	UK power adapter
EU	European power adapter
US	USA power adapter
AU/CN	Australasia power adapter

(*) = H version only available in BS500 V version
(**) = Glass version only available in BS500 E & S version

HOW SAMPLING

Bottles

At MP Filtri we offer a range of standard & ultra-clean glass bottles for your sampling needs:

100 ml, 210 ml & 500 ml Standard Bottles (not certified clean)
- 100 ml, available in amber glass or clear plastic varieties
- 210 ml, available in clear glass
- 500 ml, available in clear glass

100 ml & 210 ml Ultra Clean Glass Bottles
- Certified to ISO 3722 Hydraulic fluid power
- Fluid sample containers
- Qualifying and controlling cleaning methods NAS 0 to NAS 00/ AS4059E Table 1 Class 0

Glass Colour
Clear glass provides better visibility of the sample,making de-aeration easier to monitor. Amber glass may reduce the effect of UV light on the sample, reducing the risk of microbial growth and FAME (fatty acid methyl esters) which can be significant in fuel analysis.

DE-AERATION & CLEANLINESS

Samples should be shaken vigorously before use however this causes the sample to become aerated which means leaving it to settle.

The BS500 & BS110 de-aeration facility reduces this settling time, allowing more samples to be analysed thereby increasing productivity.

SAMPLING FACTORS

Below are some of the factors which should be considered when taking a sample. For guidance on sampling procedures refer to ISO 4021 & the product user guide.

- Location of the take-off point
- Homogeneity of the sample
- Local area cleanliness
- Bottle cleanliness
- Equipment cleanliness
- Flushing / Cleaning fluid cleanliness
- Operator clothing & cleanliness
- Air cleanliness

100 µm Dust particle (dead skin)	**40 µm** Pollen	**24 µm** White blood cell	**10 µm** Dust mite faeces	**8 µm** Red blood cell	**3 µm** E-coli bacteria

Sample hand pump

For systems where there is no practical access to a test point, a sample may need to be taken from an un-pressurized reservoir.

For this occurrence we offer a simple **hand pump device** with both off-line sampling products which provides for clean and efficient sampling.

The design ensures that only the hose is in contact with the sample fluid, providing greater confidence in analysis, and we provide a range of adapters to suit our various bottle sizes.

The pump can be fully dismantled for cleaning and the sample hose plus main seal can be replaced to further improve clean practise.

Ultra clean bottles cleaned to and in accordance with DIN/ISO 5884.

Ultra clean bottles cleanliness verified to ISO 3722.

NAS 1638 cleanliness certification of between Class 00 and Class 0.

Descriptions	Part Code	Dimensions (mm)
100 ml - Ultra Clean Bottle (Certified)	P.02	Ø 50x92
100 ml - Standard Bottle Brown Glass	BS0016	Ø 50x91
100 ml - Clear Plastic Bottle	7.111	Ø 51x92
100 ml - Standard Bottle Tray (72 bottles)	BS0072	N/A
210 ml - Ultra Clean Bottle (Certified)	P.03	Ø 65x130
210 ml - Standard Bottle	8.054	Ø 65x122
500 ml - Standard Bottle	8.328	Ø 82x152

HOW IT WORKS

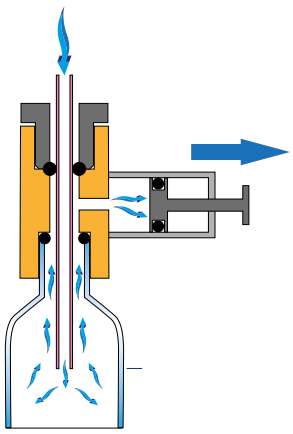

Priming the pump causes a vacuum inside the bottle, syphoning fluid from the reservoir.

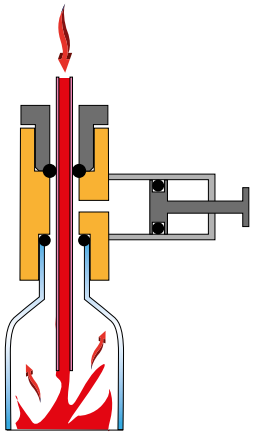

The design of the pump means that only the hose is in contact with the fluid protecting the quality of the sample.

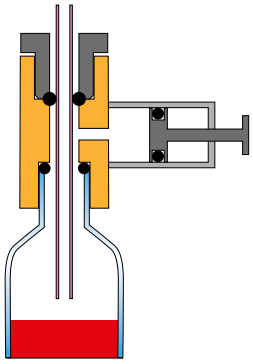

The sample level should always finish below the level of the hose.
The bottle can now be removed and capped.

The pump and its associated parts are also available as a spares. See spares list page 81.

VPAF100

Patch test kit

Description

Automatic Particle Counters

Kit for the fluids sampling and the visual analysis of the solid contaminants

> Features & Benefits

In hydraulic fluid power systems, power is transmitted through a liquid under pressure within a closed circuit.
The use of more and more sophisticated devices forces users to keep fluids under control, particularly in monitoring solid contamination.
The presence of solid contamination causes wear, reduces efficiency and the lifespan of components, and adversely affects functionality and performance.

Fluids generally used in fluid power systems are:
- Mineral oil
- Synthetic oil
- Vegetable oil
- Water based emulsions
- Water glycol

Their physical and chemical properties are influenced by following parameters:
- Working pressure
- Solid particles contamination
- Liquid contamination (other fluids or water)
- Modification of original additives

One of the simplest methods to keep fluids under control is to check solid particle contamination; for this reason is useful to have special devices such as a fluid contamination kit.

The VPF100 kit has been created to enable static and dynamic fluid sampling in power systems.
The dynamic sampling is possible when the system has special devices such as valves, pressure reduction, points of sampling, etc.

Kit composition

- Bag 1 pc.
- Monocular microscopy 100X, 1 pc.
- Electrical vacuum pump, 1 pc.
- Glass filtration apparatus ml 250, 1 pc.
- Sprinkler 500 ml with Swinnex filter, 1 pc.
- Glass Beaker 500 ml, 1 pc.
- Manual pump for fluid samples, 1 pc.
- Graduated cylinder in 50 ml, 1 pc.
- Valve for manual samples collection, 1 pc.
- Bottle for solvent fluid 500 ml, 1 pc.
- Bottles for sampling fluid 250 ml, 3 pc.
- Tweezers, 1 pc.
- Membrane 0.8 µm Ø25 for Swinnex filter, 100 pc.
- Membrane 1.2 µm Ø47 for samples, 50 pc.
- Minimes tube 1 m, 1 pc.
- Minimes tube 2 m, 1 pc.
- Labels for bottles, 50 pc.
- Sheet for membrane Ø47, 50 pc.
- Adhesive for membrane Ø47, 3 pc.
- Instruction guide 1 pc.

Principal components technical data

Microscope:
- Monocular microscope.
- Achromatic lens 10x. (100 magnifications)
- Focusing with knob.
- Revolving battery light.
- Rotating base, with vertical or inclined vision.
- Anti-dust cover.

Pump
- Single-phase 230 V 50 Hz
- Power absorbed: 50 W
- Current absorbed: 0.55 A
- Fuses: 2 - 1 A

Pumps are designed for:
- Air, gases and vapours from + 5 °C to + 40 °C
- Keep purity of fluid also when a high precision is required.
- Functioning with a maximum overpressure of 2.4 bar.

Microscope analysis

Microscope analysis allows determining nature and sizes of solid particles inside the fluid.
Table below shows a statistical list of contaminants inside the fluids.
"**Other**" indicates for example paints, additives precipitation, residuals, etc.
Colour, geometric shape and particles brightness constitute some of parameters to classify contaminants.

Nature of contaminants
Bright metal
Dark metal
Silica
Rubbers and plastic
Fibres
Other

Particles Quantitative analysis

After determination of the nature (and sizes) of particles inside the fluid, it is useful to quantify the contamination inside system.
Determination of quantitative contamination is done by taking fluid sample from the system (preferably in working conditions) and following the sample fluid analysis with an automated particle counter or with a portable particle counter that is linked directly to the system.
They give immediate results according to standard ISO 4406 or NAS 1638.
Both particle counters, portable or not, have values and counter indications.
Please note the portable particle counters need a minimum pressure to work correctly. They produce immediate results.

Technical data

Sampling
Static: manual pump
Dynamic: Kit minimess + tap + probe

Patch test
Membrane ø 47-1.2 µm

Visual analysis
Portable monocular microscope 10x

Electric pump for vacuum
230V 50Hz - Absorbed power 50 W

Samples filtration system
Glass collecting flask - 0.5lt
250ml membrane glass holder
Solvent spray with ø 25-0.8 µm membrane holder

Accessories for identification and test report
Container labels
Membrane support cartons
Adhesive film for membrane protection

Rigid carrying case
Height 400mm, depth 515mm, width 270mm.
Weight 11kg
Dustproof closure with lockable closure

FLUID COMPATIBILITY CHARTS

HYDROCARBON AND SYNTHETIC

Fluid type	Fluid spec.	ICM				LPA				CML				BS110	BS500		
		M	(W)	N	S	M	(W)	N	S	M	(W)	N	S	M	V	E	S
SYNTHETIC OR MINERAL BASED LIQUIDS	AEROSHELL FLUID 31 (OX-19)																
	AEROSHELL FLUID 51																
	AEROSHELL FLUID 602																
	CASTROL CONSTAB PS 10W-40																
	DIESEL CALIBRATION OIL 4113																
	FINA POLYGLYCOL FLUID																
	GEAROIL ISO VG 320																
	ISO 32																
	ISO 46																
	ISO 68																
	MIL-H-5606																
	MIL-H-83282																
	MIL-H-87257																
	MOBILGEAR SHC XMP 320																
	NATO H-515 (OM-15)																
	NATO H-520 (OM-18)																
	NATO H-537																
	RENOLIN PG 68																
	RENOLIN PG 100																
	RENOLIN PG 150																
	RENOLIN PG 220																
	RENOLIN PG 320																
	RENOLIN PG 460																
	RENOLIN PG 680																
	RENOLIN PG 1000																
	RENOLIN UNISYN OL 32																
	RENOLIN UNISYN OL 46																
	RENOLIN UNISYN OL 68																
	RENOLIN UNISYN OL 100																
	RENOLIN UNISYN OL 150																
	STATOIL HYDRAULIC 131																
	AERO HF585B																
	MOBIL DTE 25																

For special applications or for fluids not mentioned in this table, please contact MP Filtri Technical and Sales Department.
Alternatively, visit the services section of our website where we have details on fluid testing and analysis.
For guidance on moisture sensing compatibility, contact MP Filtri Technical and Sales Department.
Typically conductive fluids are not compatible with the moisture sensor.

Compatible
Not compatible
Contact MP Filtri

Please note that compatibility is based product performance with fluid viscosity at 20°C in standard dye colourant or natural state. Tests are conducted with the suitable fluid in its pure state. Performance of solutions or mixed emulsions cannot be guaranteed. “Compatibility” is defined as a liquid which does not suffer short or long term degradation as a result of coming into contact with the wetted materials contained within the product. It is also a confirmation that the transparency of the liquid is suitable for the sensitivity of the product range.

For details on the specific product code required for your fluid, contact contact MP Filtri Technical and Sales Department.

OFFSHORE

Fluid type	Fluid spec.	ICM				LPA				CML				BS110	BS500		
		M	(W)	N	S	M	(W)	N	S	M	(W)	N	S	M	V	E	S
OFFSHORE & SELECTED WATER BASED FLUIDS	HW443																
	HW443R																
	HW453																
	HW540																
	HW540																
	PELAGIC 50																
	PELAGIC 100																
	TRANSAQUA HT																
	TRANSAQUA HT2																
	FRESH WATER																
	DE-IONISED WATER																
	SEAWATER																
	HOUGHTO-SAFE 273 CTF																
	HOUGHTO-SAFE BC24046																
	WATER GLYCOL HFC 46																
	LF2100 (99%WATER, 1% MIX)																
	SV3																

AGGRESSIVE FLUIDS

Fluid type	Fluid spec.	ICM				LPA				CML				BS110	BS500		
		M	(W)	N	S	M	(W)	N	S	M	(W)	N	S	M	V	E	S
PHOSPHATE ESTHER & AGGRESSIVE LIQUID APPLICATIONS	HYJET IV																
	HYJET V																
	SKYDROL 500B																
	SKYDROL 500B4																
	SKYDROL LD4																

Compatible
Not compatible
Contact MP Filtri

For special applications or for fluids not mentioned in this table, please contact MP Filtri Technical and Sales Department.
Alternatively, visit the services section of our website where we have details on fluid testing and analysis.
For guidance on moisture sensing compatibility, contact MP Filtri Technical and Sales Department.
Typically conductive fluids are not compatible with the moisture sensor.

Please note that compatibility is based product performance with fluid viscosity at 20°C in standard dye colourant or natural state. Tests are conducted with the suitable fluid in its pure state. Performance of solutions or mixed emulsions cannot be guaranteed. “Compatibility” is defined as a liquid which does not suffer short or long term degradation as a result of coming into contact with the wetted materials contained within the product. It is also a confirmation that the transparency of the liquid is suitable for the sensitivity of the product range.

For details on the specific product code required for your fluid, contact contact MP Filtri Technical and Sales Department.

FLUID COMPATIBILITY CHARTS

FUELS

Fluid type	Fluid spec.	ICM				LPA				CML				BS110	BS500		
		M	(W)	N	S	M	(W)	N	S	M	(W)	N	S	M	V	E	S
FUELS	JET A-1																
	JET A																
	JET B																
	JP1																
	JP5																
	JP6																
	JP7																
	JP8																
	JPTS																
	FT JET FUEL																
	GTL JET FUEL BLEND																
	DIESELS																

BIO FLUIDS

Fluid type	Fluid spec.	ICM				LPA				CML				BS110	BS500		
		M	(W)	N	S	M	(W)	N	S	M	(W)	N	S	M	V	E	S
BIODEGRADEABLE FLUIDS & VEGETABLE OILS	BIO-ETHANOL																
	BIO-DIESEL																
	PLANTOHYD N SERIES																
	PANOLIN HLP SYNTH 22																
	SUNFLOWER OIL																
	RAPESEED OIL																
	CORN OIL																
	GROUND NUT OIL																
	CAT BIO HYDO HEES																

Compatible
Not compatible
Contact MP Filtri

For special applications or for fluids not mentioned in this table, please contact MP Filtri Technical and Sales Department.
Alternatively, visit the services section of our website where we have details on fluid testing and analysis.
For guidance on moisture sensing compatibility, contact MP Filtri Technical and Sales Department.
Typically conductive fluids are not compatible with the moisture sensor.

Please note that compatibility is based product performance with fluid viscosity at 20°C in standard dye colourant or natural state. Tests are conducted with the suitable fluid in its pure state. Performance of solutions or mixed emulsions cannot be guaranteed. “Compatibility” is defined as a liquid which does not suffer short or long term degradation as a result of coming into contact with the wetted materials contained within the product. It is also a confirmation that the transparency of the liquid is suitable for the sensitivity of the product range.

For details on the specific product code required for your fluid, contact contact MP Filtri Technical and Sales Department.

Description	Ordering Code	LPA3	LPA2	CML	ICM	BS110	BS500
Minimess Hose Extension kit - 5000mm	SK0500	●	●	●	●		
Minimess Hose Extension kit - 10000mm	SK0100	●	●	●	●		
Coarse Screen Filter	SK0040	●	●	●	●		
LPA2 Carry Bag	CB0001		●				
Calibration Verification Fluid	PCCF	●	●	●		●	●
Waste Bottle (1 Litre) - Round	SK0012	●	●	●			
Waste Bottle (1 Litre) - Square (for use with CB0001)	SK0013		●	●			
Minimess Pressure Hose - 600mm, plated steel (mineral/synthetic fluid)	95.Y30Y30X261060	●	●	●	●	●	●
Minimess Pressure Hose - 1500mm, plated steel (mineral/synthetic fluid)	95.Y30Y30X261150	●	●	●	●		
Minimess Pressure Hose - Stainless Steel, for use with offshore fluids (N version of CMP units) - 600mm	95.Y30Y30X161060	●	●	●		●	●
Minimess Pressure Hose - Stainless Steel, for use with offshore fluids (N version of CMP units) - 1500mm	95.Y30Y30X161150	●	●	●	●		
Series 30 Waste Hose	SK0014S30	●	●	●			
Series 30 Waste Hose - Stainless Steel, for use with offshore fluids (N version of CMP units) - 2m	SK0014S30N	●	●	●			
Series 30 Waste Hose - Perfluorelastomer seals, for use with Phosphate Esters (S version of CMP units) - 2m	SK0014S30S	●	●	●			
Impact printer paper for use with Series 20 & 30 - single	SK0018		●				
Impact printer paper for use with Series 20 & 30 - box of 20	SK0018-20		●				
Printer ribbon for use with Series 20 & 30 - single	SK0020		●				
Printer ribbon for use with Series 20 & 30 - pack of 10	SK0020-10		●				
Thermal printer paper for Series 30.1 - single	6.160		●				
Thermal printer paper for Series 30.1 - box of 20	6.160-20		●				
Thermal printer paper for LPA3	63.083000	●					
12V, 2A Power Adapter - UK	6.209		●	●		●	
Disposable Dip tubes - pack of 50	BS0018					●	
Hand Pump	BS0020					●	
Hand Pump Hose- 1000mm	BS0022					●	
Bottle Sampler hand pump and hose kit	BS0024					●	
Serial cable to USB converter	SK0026		●	●			
Black support case (without contents)	BS0040					●	
Heavy Duty Travel Case for LPA2	TC0005LPA		●				
Heavy Duty Travel Case for Bottle Sampler	TC00055B						●
PC Download cable	6.123		●	●			
100ml Standard Brown Glass Bottle	BS0016					●	
Tray of 72 x 100ml Standard Brown Glass Bottles	BS0072					●	
100ml Clear Plastic Bottle	7.111					●	
Box of 20 x 100ml Clear Plastic Bottles	7.112					●	
200ml Standard Clear Glass Bottle	8.054						●
Box of 20 x 200ml Standard Clear Glass Bottles	8.054						●
500ml Standard Clear Glass Bottle	8.328						●
100ml Ultra-clean Clear Glass bottle, Cleaned in accordance with DIN/ISO 5584 and verified to ISO3722	P.02					●	
Pack of 25 x 100ml Ultra-clean Clear Glass bottles, Cleaned in accordance with DIN/ISO 5584 and verified to ISO3722	P.0225					●	
200ml Ultra-clean Clear Glass bottle, Cleaned in accordance with DIN/ISO 5584 and verified to ISO3722	P.03						●
Pack of 20 x 200ml Ultra-clean Clear Glass bottles, Cleaned in accordance with DIN/ISO 5584 and verified to ISO3722	P.0320						●
Power Adapter for 500ml Bottle Sampler	8.029						●
UK Lead for 8.029	8.031	●					●
EU Lead for 8.029	8.032	●					●
US Lead for 8.029	8.030	●					●
CN/AUS Lead for 8.029	8.072	●					●
Power Adapter for LPA3	61.034000	●					
Pouch for pressure hose/waste hose	7.106000	●	●	●			
USB A-B cable	11.081000	●					
USB stick with all user guides and LPA-View Software	13.055001	●	●	●	●	●	●
Fluid Condition Handbook	200.059	●	●	●	●	●	●

Accessories

Description

Remote Display Unit

Depending on your application, access and visibility of particle counting equipment can sometimes be an issue. The ICM-RDU has specially been developed to dovetail with its parent ICM 2.0. So you have the option to control and monitor the ICM 2.0 remotely. Supplied with a 10m cable as standard.

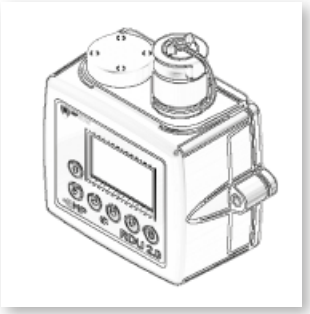

> Features & Benefits

- Large backlit display
- Keypad interface
- Robust die-cast aluminium construction

Scope of Supply

1 x ICMRDU2.0
1 x 10m Twisted Pair Cable Assembly
1 x Digital copy of user guides/software/drivers

Status LED

All RDU 2.0 versions have a multicolour indicator on the front panel, which is used to indicate the status or alarm state. RDU-K versions also have a screen that changes colour. The alarm thresholds can be set from LPA-View via the serial interface.

Screen and multicolor indicators

- Green indicates that the test result passed, i.e. none of the alarm thresholds were exceeded
- Yellow indicates that the lower cleanliness limit was exceeded, but not the upper one
- Red indicates that the upper clean liness limit was exceeded
- Blue indicates that the upper water content limit was exceeded
- Red/Blue Alternating indicates both cleanliness and water content upper limits exceeded
- Violet indicates that the upper temperature limit was exceeded

Left facing view

Right facing view

Top view with USB port

Bottom view

Dimensions

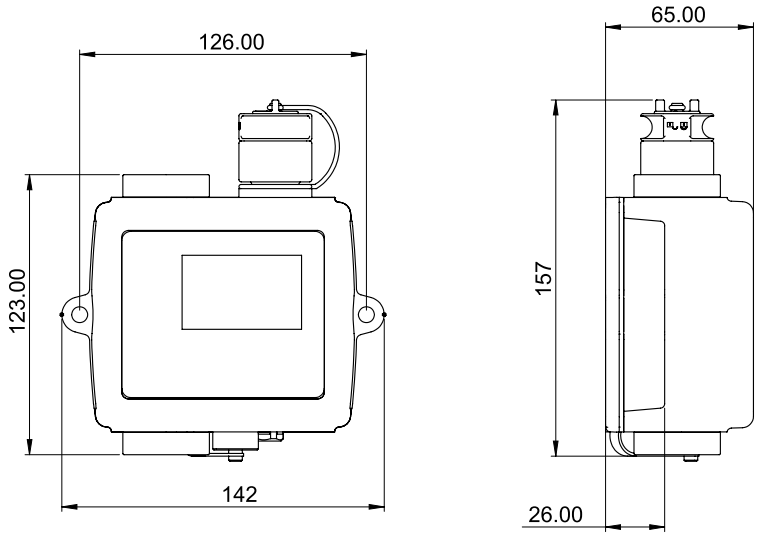

Designation & Ordering code

RDU 2.0

Configuration: ICM | RDU 2.0

Description

Auxiliary Communication Options

We offer four auxiliary communication devices to operate with the ICM 2.0:

ICM-USBi:
Two auxiliary communication devices are available to order with the ICM.
A USB interface which allows for communication via a laptop (RS485 to RS232 converter) & an ethernet device for remote access via a network hub.

ICM-ETHi:
An ethernet device enables remote access via a network hub via Com Port redirection software.

Both devices can transmit power to the ICM/RDU electrical circuit using a DC power adapter.
The USBi has the additional benefit of supplying power via the USB cable directly. Both devices come with a DC Power adapter and 3m twisted pair cable as standard.

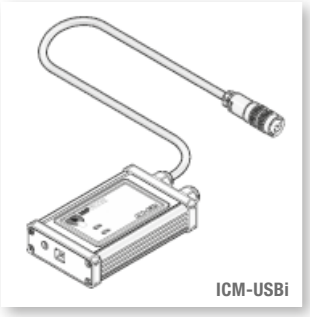

> Features & Benefits

- Compact
- Off the shelf solution
- Robust aluminium construction

Plug and play technology

- Robust aluminium construction
- Compact
- Provided with a twisted cable conductors 8, length 3m.
- All devices can transmit power to the ICM/RDU electrical circuit using the supplied DC power adapter.

ICM-USBi

ICM-ETHi

Dimensions

ICM-USBi

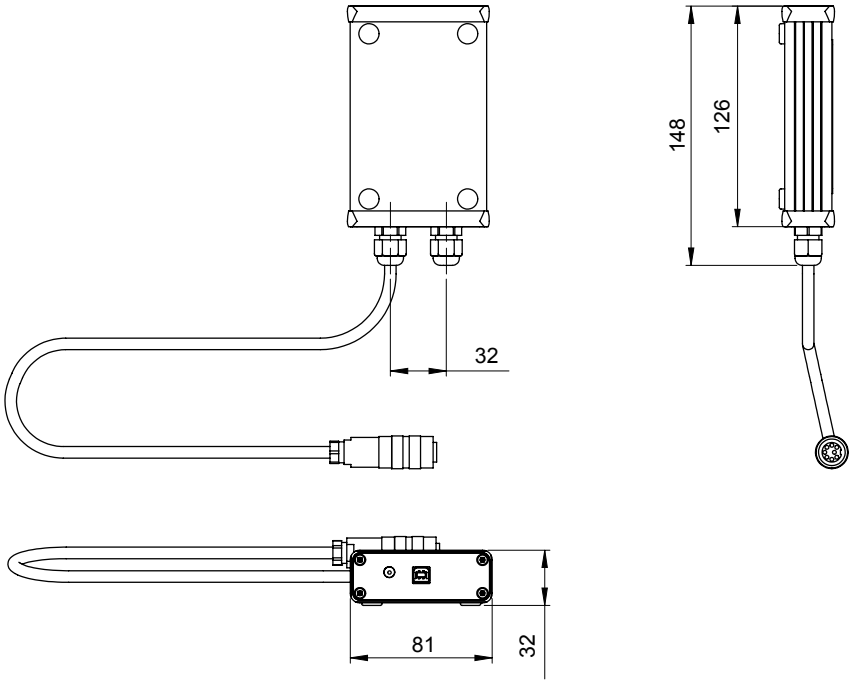

ICM-ETHi

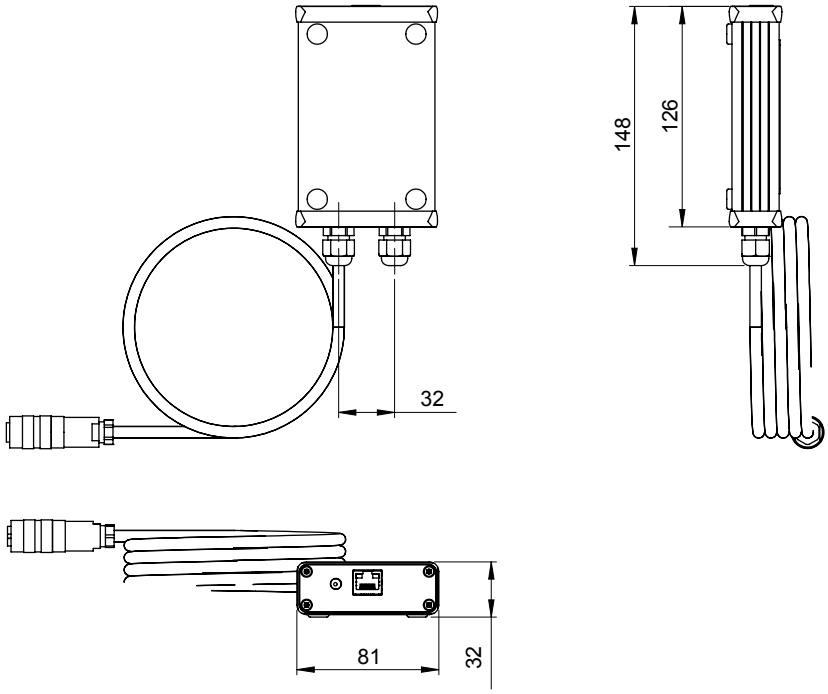

Designation & Ordering code

ICM-USBi & ICM-ETHi

Configuration:	ICM	USBi
	ICM	ETHi

Description

Flow Control Valve

The FC1 is a pressure compensated flow control valve which can operate across a range of fluid types and is compatible with the ICM where flow rate exceeds operating parameters. Max pressure rating 400barg at normal hydraulic system temperatures.

> Features & Benefits

- Pressure compensated
- Regulates flow to within ICM specification
- Various connection options
- Viscosity independent
- Hexagonal form for ease of installation

Dimensions

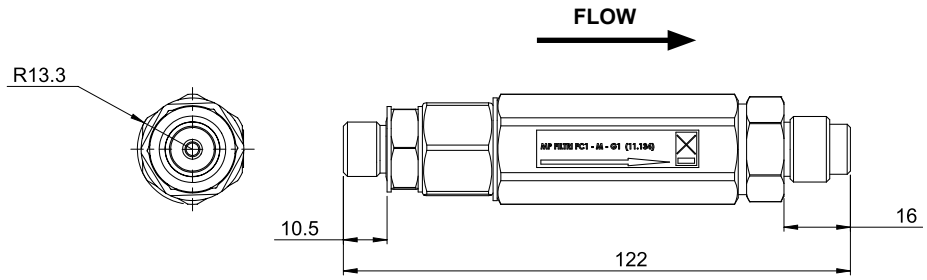

Designation & Ordering code

ICM-FC1

Configuration example: ICM-FC1 | M | G1

Series

ICM-FC1

Fluid compatibility

M	Mineral oil
N	Offshore fluids
S	Phosphate ester

Connections

G1	ICM complete with M16 x 2 pressure test point connections fitted
G3	1/4” BSP - Female port
G4	7/16” UNF - Female port

Description

Screen Filter

The SK0040 coarse screen filter adapter is designed to limit the ingress of large particles into MP Filtri's range of Contamination Monitoring Products (CMP).

> Features & Benefits

- Part number: SK0040
- Inlet connection: M16x2 male test point
- Outlet connection: M16x2 female thread form
- Pressure rating: 400 bar
- Mesh rating: 600µm

Used with LPA3, LPA2, CML2 and ICM2.0

Dimensions

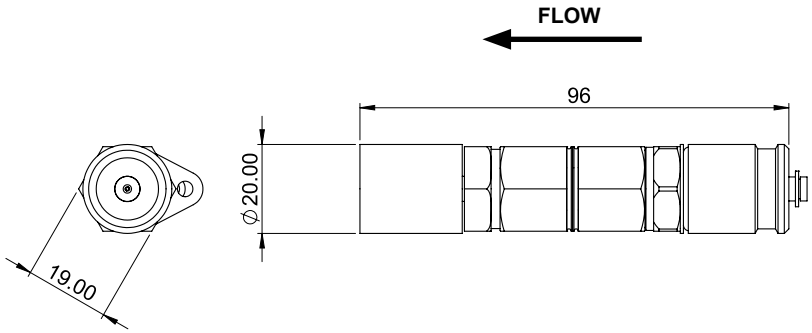

Designation & Ordering code

SK0040

Configuration: SK0040

Description

> Features & Benefits

We supply laboratory standard and certified clean sampling bottles. 100ml, 210ml and 500ml bottle sizes are available and are easily incorporated into our range of bottle samplers.

Designation & Ordering code

BS110 - BS500

For Ordering Codes see page 81.

Description

> Features & Benefits

Replacement hoses.

Pressure Hose
M16x2 Micro bore pressure hose by length (various available) long
Plated steel (alternative material options available)

Pressure hoses are able to connect MP Filtri products directly to your hydraulic systems.

Waste Hose
Length: 2000mm
OD: 8mm
ID: 5mm
Standard material: Polyurethane*
Fitting type: Quick release coupling (brass as standard)

*Other versions available to suit the M, N and S versions of CMP

- LPA3
- LPA2
- CML2
- BS110 - BS500
- ICM 2.0

- LPA3
- LPA2
- CML2

Designation & Ordering code

HOSES

For Ordering Codes see page 81.

Filtered to perfection

Our mobile filtration units provide the perfect solution for the oil maintenance of your lubrication and hydraulic fluids in off-line filtration applications.

Benefits:
- Versatile and compact design
- Filtering and continuous cleaning of systems
- Removal of water from hydraulic systems (when fitted with a spin on filter)
- Particle counting to determine the Contamination Class according to ISO4406, NAS1638, AS4059

Applications:
- For oil changes, initial filling and flushing cycles in hydraulic and lubrication systems
- Pulp and paper mill equipment
- Construction machinery
- Large central hydraulic power units
- Injection moulding equipment
- Stamping presses

Mobile filtration units

UFM 015

UFM 041

UFM 051

UFM 091-181-919

FTU

UFM 015	page 95
UFM 041	101
UFM 051	107
UFM 091	113
UFM 181	119
UFM 919	125
FTU 080	131

UFM 015

Mobile filtration unit 15 l/min flow rate

Description

Mobile filtration units

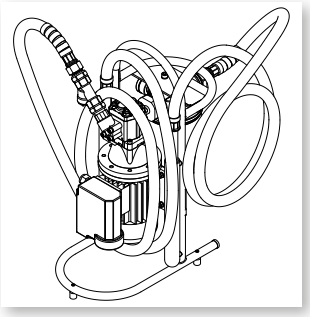

The UFM 015 is a portable oil transfer/filtration unit, specifically designed for both filling/transferring hydraulic oils from containers to the hydraulic tank as well as filtering and cleaning hydraulic systems.
The unit utilises Spin-On standard cartridge (supplied as option), available in two lengths, thus increasing the dirt holding capacity and lowering pressure drop of the unit.
The unit has the flexibility in being able to offer a wide range of medias and micro ratings to suit any application.
The unit is very compact and lightweight.

> Features & Benefits

- Handle size
- Light
- Easy to use
- Easy maintenance
- Reliable
- Absolute filtration

Technical data

Pump
Gear pump

Electric Motor
0.18 Kw 230 Volt single phase electric motor

Flow (l/min)
15 l/min - 1450 r.p.m.

Max. Operation Pressure
4 bar

Viscosity range
Min. operation 10 cSt
Max. operation 200 cSt
Max. only for cold start 400 cSt

Suction Filter
Type Y filtration 500 µm

Filtration Rating
1/3/6/10/25 µm β>1000 flow through the element Out/In

Bypass valve
Rating 2.5 bar

Fluid Temperature
From +5° to 60 °C

Ambient Temperature
From +5° to 40 °C

Protection Class
IP 55

Seal
NBR

Fluid Compatibility
Mineral Oil - Other on request

Suction hose	**lance**
DN18 length 2500 mm	DN/OD20 length 400 mm

Pressure hose	**lance**
DN18 length 2500 mm	DN/OD18 length 400 mm

Weight
14.8 kg

Equipment
Visual clogging indicator (gauge)

CE **Standard**

UFM 015

Designation & Ordering code

MOBILE FILTRATION UNIT UFM 015

Configuration example: UFM | 015 | M | A | 1 | 0 | 0 | 0 | P01

Series
UFM

Size
015 15 l/min

Electric motor
M 220V single phase

Seals
A NBR

Pressure gauges and Clogging indicators
1 Manometer

Cartridge
0 Without cartridge

Filtration surface
0 Not provided

Option
0 No options

Option
P01 MP Filtri standard
Pxx Customized

Cartridge should be ordered separately

CARTRIDGE STANDARD LENGTH

Inorganic microfibre	Wire mesh element
CS 100 A01 A P01	CS 100 M25 A P01
CS 100 A03 A P01	CS 100 M60 A P01
CS 100 A06 A P01	
CS 100 A10 A P01	
CS 100 A25 A P01	

CARTRIDGE EXTENDED LENGTH

Inorganic microfibre	Wire mesh element
CS 150 A01 A P01	CS 150 M25 A P01
CS 150 A03 A P01	CS 150 M60 A P01
CS 150 A06 A P01	
CS 150 A10 A P01	
CS 150 A25 A P01	

WATER REMOVAL - CARTRIDGE EXTENDED LENGTH

Multi-Layer water absorber
CW150P10A

Dimensions

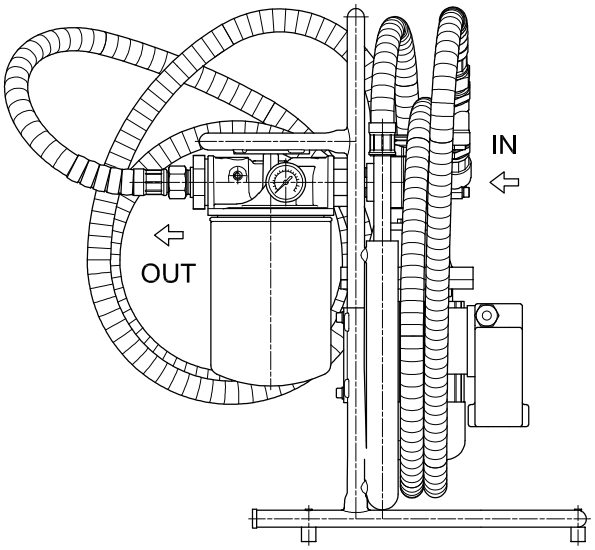

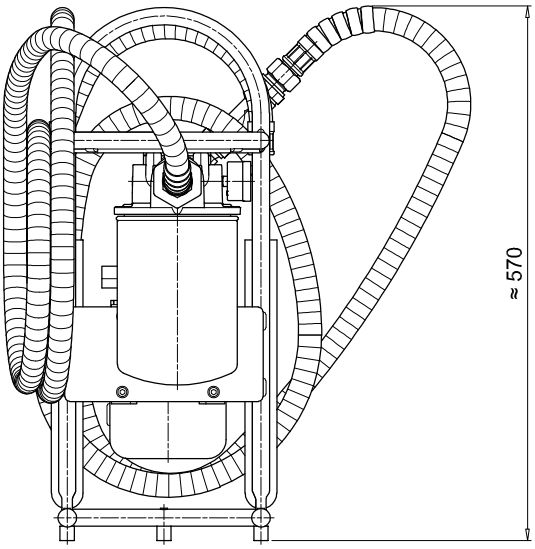

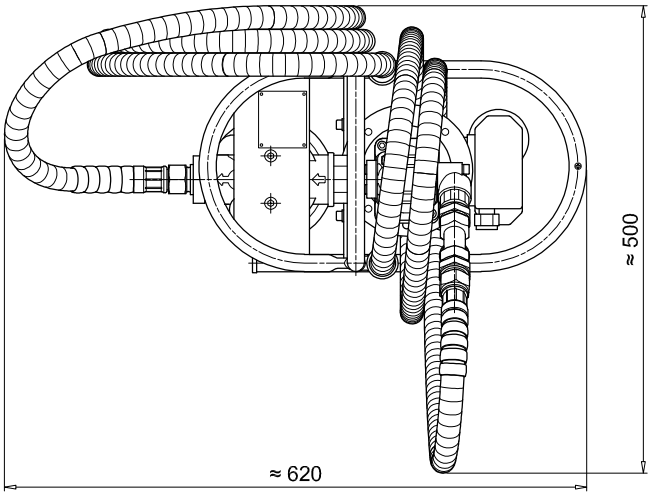

HYDRAULIC CIRCUIT

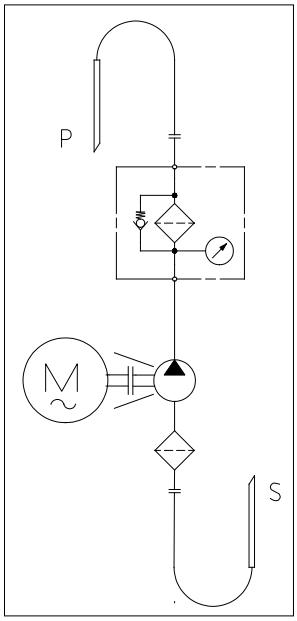

UFM 041

Mobile filtration unit 34 l/min flow rate

Description

Mobile filtration units

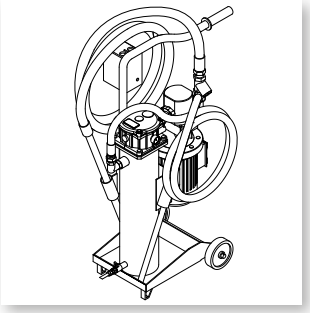

UFM 041 mobile filtration units suitable for filling and refilling of filtered hydraulic fluids and lubrication tanks.

The filter unit connected to off-line to the tank (recommended maximum volume of 350/500 L.), can be used as a support to the filtration plant on start-up for fast flushing action, either as additional filtration systems with a high incidence of contamination.

Continued use is recommended for the version with three phase electric motor.

> Features & Benefits

- Compact size
- Light
- Easy to use
- Easy maintenance
- Reliable
- Absolute filtration

Technical data

Pump
Gear pump

Electric Motor
0.75 Kw 230 Volt single phase electric motor
0.75 Kw 400/230 Volt three phase electric motor

Flow (l/min)
34 l/min - 1450 r.p.m.

Max. Operation Pressure
5 bar

Viscosity range
Min. operation 10 cSt
Max. operation 200 cSt
Max. only for cold start 800 cSt

Suction Filter
Type Y filtration 350 µm

Filtration Rating
1/3/6/10/25 µm β>1000 flow through the element In/Out

Bypass valve
Rating 2.5 bar

Fluid Temperature
From -10° to +80 °C

Ambient Temperature
From -20° to +45 °C

Protection Class
IP 55

Seal
NBR

Fluid Compatibility
Mineral Oil & Synthetic Oil - Other on request

Suction hose	**lance**
DN25 length 3000 mm	DN/OD25 length 700 mm

Pressure hose	**lance**
DN20 length 3000 mm	DN/OD20 length 700 mm

Weight
45 kg

Equipment
Visual clogging indicator (gauge)

CE **Standard**

UFM 041

Designation & Ordering code

MOBILE FILTRATION UNIT UFM 041

Configuration example: UFM | 041 | T | A | 1 | 0 | 1 | 0 | P01

Series
UFM

Size
041 34 l/min

Electric motor
M 230V single phase
T 400/230V three phase

Seals
A NBR

Pressure gauges and Clogging indicators
1 Manometer

Filter element
0 Without element

Filtration surface
1 Standard

Option
0 No options

Option
P01 MP Filtri standard
Pxx Customized

Filtration element should be ordered separately

FILTRATION SURFACE - STANDARD

Inorganic microfibre	Wire mesh element
MR 250 4 A01 A P01	MR 250 4 M25 A P01
MR 250 4 A03 A P01	MR 250 4 M60 A P01
MR 250 4 A06 A P01	
MR 250 4 A10 A P01	
MR 250 4 A16 A P01	
MR 250 4 A25 A P01	

WATER REMOVAL - FILTRATION SURFACE - STANDARD

Multi-Layer water absorber
MR2504WA025AP01

Dimensions

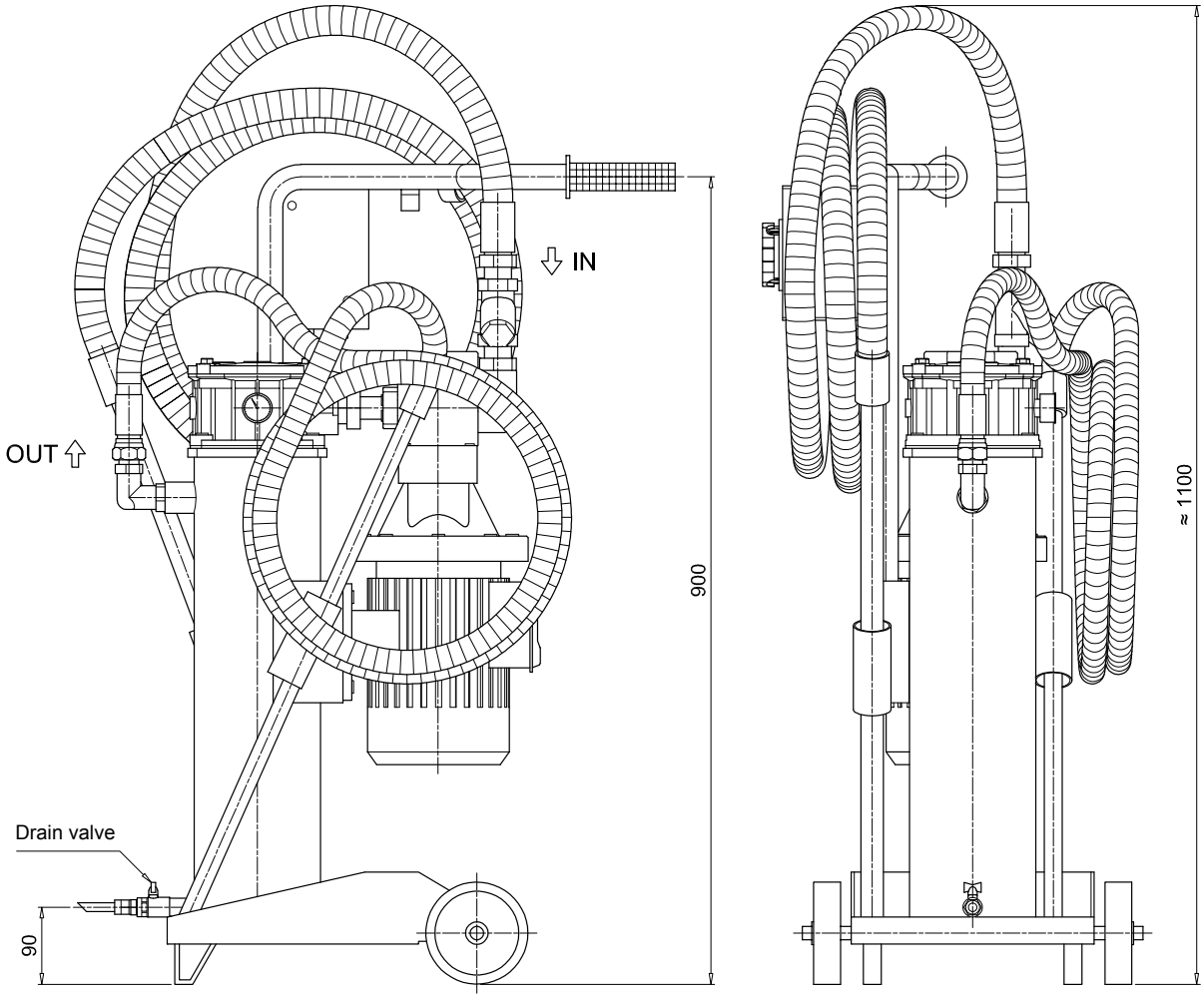

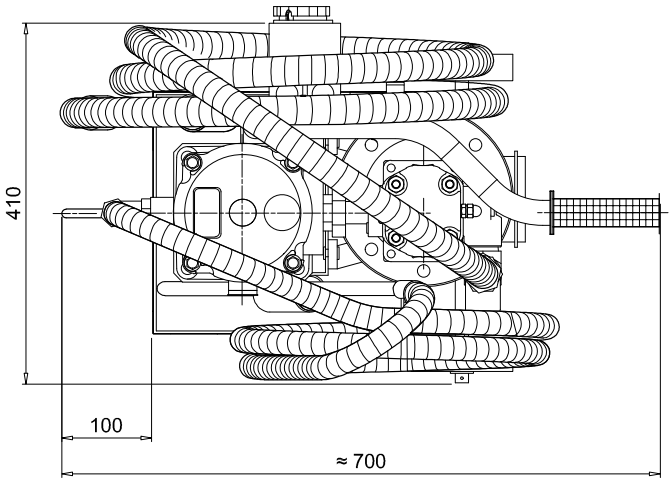

HYDRAULIC CIRCUIT

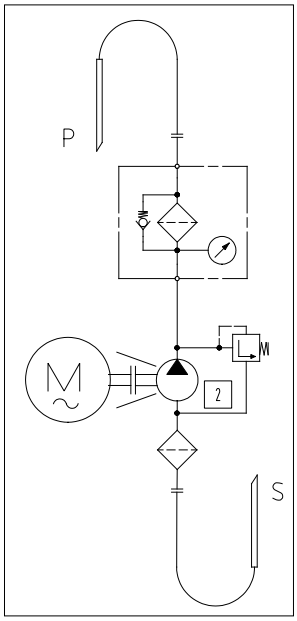

UFM 051

Mobile filtration unit 50 l/min flow rate

Description

Mobile filtration units

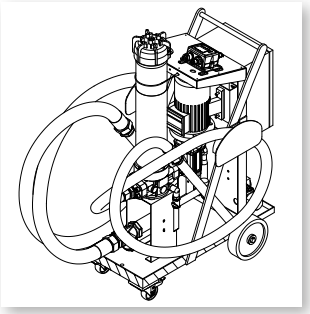

UFM 051 mobile filtration units suitable for filling and refilling of filtered hydraulic fluids and lubrication tanks.

The filter unit connected to off-line to the tank (recommended maximum volume of 500/750 L.), can be used as a support to the filtration plant on start-up for fast flushing action, either as additional filtration systems with a high incidence of contamination.

Continued use is recommended for the version with three phase electric motor.

> Features & Benefits

- Compact size
- Continue Operation Pressure 10 bar
- Easy to use
- Easy maintenance
- Reliable
- Absolute filtration
- In-line Contamination Monitor

Available in three configurations:

- configuration with start / stop differential pressure indicator - visual

- configuration with start / stop automatic motor
- cut-out from differential pressure indicator - electrical / visual

- configuration with start / stop phase inverter automatic motor
- cut-out from differential pressure indicator - electrical / visual
- in-line Particle Counter ICM

Technical data

Pump
Gear pump

Electric Motor
1.5 Kw 230 Volt single phase electric motor
1.5 Kw 400/230 Volt three phase electric motor with ICM 2.0

Flow (l/min)
50 l/min - 1450 r.p.m.

Max. Operation Pressure
10 bar

Viscosity range
Min. operation 10 cSt
Max. operation 300 cSt
Max. only for cold start 800 cSt

Suction Filter
Type Y filtration 800 µm

Filtration Rating
1/3/6/10/25 µm β>1000 flow through the element Out/In

Bypass valve
Rating 3.5 bar
The bypass can be blocked through the spigot

Fluid Temperature
From -10° to +80 °C

Ambient Temperature
From -20° to +45 °C

Protection Class
IP 55

Fluid Compatibility
Mineral Oil & Synthetic Oil - Other on request

Suction hose	**lance**
DN32 length 3000 mm	DN/OD42 length 700 mm

Pressure hose	**lance**
DN25 length 3000 mm	DN/OD30 length 700 mm

Weight
70 kg

Equipment
- Differential Clogging indicator - Visual (setting 3 bar ±10%)
- Differential Clogging indicator - Electrical / Visual (setting 3 bar ±10%)
- Differential Clogging indicator - Electrical / Visual - with ICM 2.0 (setting 3 bar ±10%)

CE **Standard**

UFM 051

Designation & Ordering code

MOBILE FILTRATION UNIT UFM 051

Configuration example: UFM | 051 | T | A | 2 | 0 | 1 | 0 | P01

Series

UFM

Size

051 50 l/min

Electric motor

M 230V Single phase

T 400/230V Three phase

Seals

A NBR

Pressure gauges and Clogging indicators

2 Manometer + Visual Differential Clogging indicator

3 Manometer + Electrical/Visual Differential Clogging indicator

Filter element

0 Without element

Filtration surface

1 Standard

2 Higher

Option

0 No options

1 ICM 2.0 particle counter (available three phase electric motor only)

Option

P01 MP Filtri standard

Pxx Customized

Filtration element should be ordered separately

FILTRATION SURFACE 1 - STANDARD

Inorganic microfibre	Wire mesh element
CU 400 5 A01 A N P01	CU 400 5 M25 A N P01
CU 400 5 A03 A N P01	CU 400 5 M60 A N P01
CU 400 5 A06 A N P01	
CU 400 5 A10 A N P01	
CU 400 5 A16 A N P01	
CU 400 5 A25 A N P01	

FILTRATION SURFACE 2 - HIGHER

Inorganic microfibre	Wire mesh element
CU 400 6 A01 A N P01	CU 400 6 M25 A N P01
CU 400 6 A03 A N P01	CU 400 6 M60 A N P01
CU 400 6 A06 A N P01	
CU 400 6 A10 A N P01	
CU 400 6 A16 A N P01	
CU 400 6 A25 A N P01	

WATER REMOVAL - FILTRATION SURFACE 1 - STANDARD

Multi-Layer water absorber
CU4005WA025ANP01

WATER REMOVAL - FILTRATION SURFACE 2 - HIGHER

Multi-Layer water absorber
CU4006WA025ANP01

Dimensions

Filter length	H1 [mm]
1	1230 standard
2	1530 higher

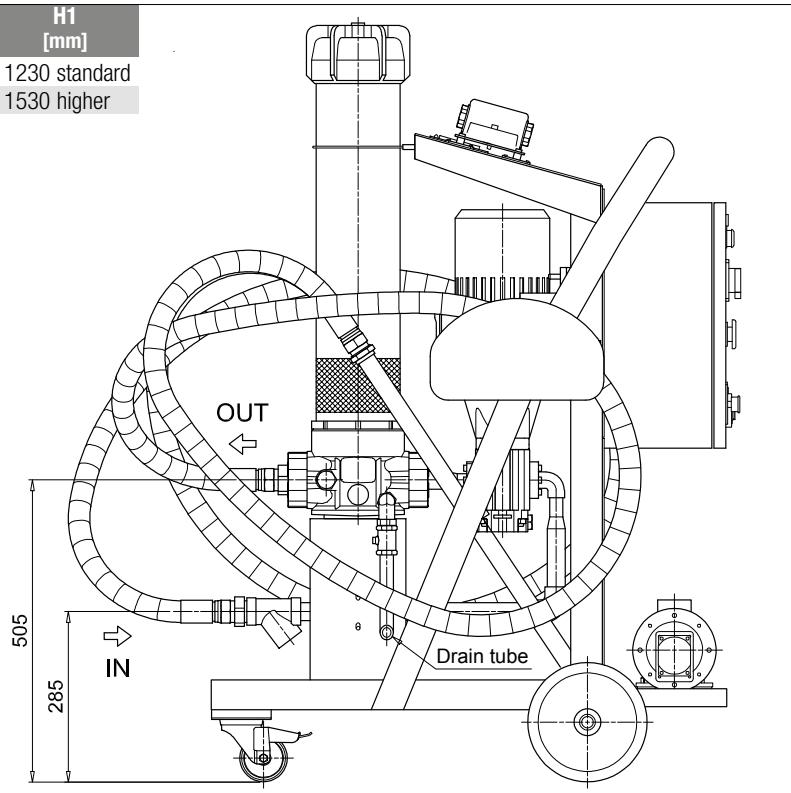

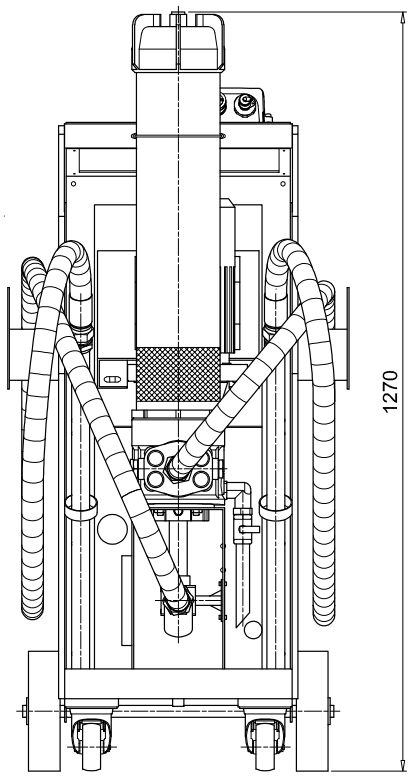

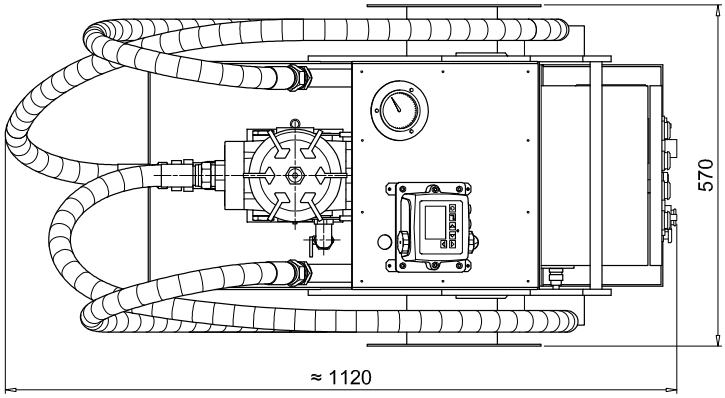

HYDRAULIC CIRCUIT

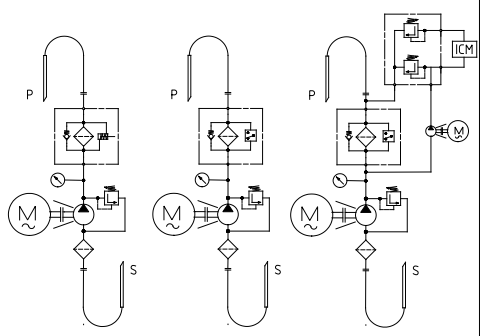

with visual differential indicator

with visual / electrical differential indicator

with ICM 2.0 particle counter

UFM 091

Mobile filtration unit 90 l/min flow rate

Description

Mobile filtration units

UFM 091mobile filtration units suitable for filling and refilling of filtered hydraulic fluids and lubrication tanks.
The filter unit connected to off-line to the tank, can be used as a support to the filtration plant on start-up for fast flushing action, either as additional filtration systems with a high incidence of contamination.
Recommended maximum tank volume of 900/1300 L.

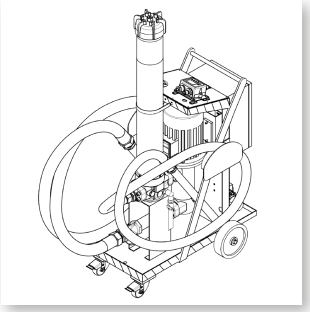

> Features & Benefits

- Compact size
- High flow
- Continue Operation Pressure 10 bar
- Easy to use
- Easy maintenance
- Reliable
- Absolute filtration
- In-line Contamination Monitor

Available in three configurations:

- configuration with start / stop differential pressure indicator - visual

- configuration with start / stop automatic motor
- cut-out from differential pressure indicator - electrical / visual

- configuration with start / stop phase inverter automatic motor
- cut-out from differential pressure indicator - electrical / visual
- in-line Particle Counter ICM

Technical data

Pump
Screw pump

Electric Motor
2.2 kW 400/230 V three phase 4-pole

Flow (l/min)
90 l/min - 1450 r.p.m.

Max. Operation Pressure
10 bar

Viscosity range
Min. operation 10 cSt
Max. operation 800 cSt
Max. only for cold start 2000 cSt

Suction Filter
Type Y filtration 800 µm

Filtration Rating
1/3/6/10/25 µm β>1000 flow through the element Out/In

Bypass valve
Rating 3.5 bar with bypass.
The bypass can be blocked through the spigot

Fluid Temperature
From -10° to +80 °C

Ambient Temperature
From -20° to +45 °C

Protection Class
IP 55

Seal
NBR

Fluid Compatibility
Mineral Oil & Synthetic Oil - Water Glycol

Suction hose	**lance**
DN50 length 3000 mm	DN/OD50 length 700 mm

Pressure hose	**lance**
DN38 length 3000 mm	DN/OD42 length 700 mm

Weight
105 kg

Equipment
- Differential Clogging indicator - Visual (setting 3 bar ±10%)
- Differential Clogging indicator - Electrical / Visual (setting 3 bar ±10%)
- Differential Clogging indicator - Electrical / Visual - with ICM 2.0 (setting 3 bar ±10%)

CE **Standard**

UFM 091

Designation & Ordering code

MOBILE FILTRATION UNIT UFM 091

Configuration example: UFM 091 T A 2 0 2 0 P01

Series

UFM

Size

091 90 l/min

Electric motor

T 400/230V Three phase

Seals

A NBR

Pressure gauges and Clogging indicators

2 Manometer + Visual Differential Clogging indicator

3 Manometer + Electrical/Visual Differential Clogging indicator

Filter element

0 Without element

Filtration surface

2 Higher

Option

0 No options

1 ICM 2.0 particle counter

Option

P01 MP Filtri standard

Pxx Customized

Filtration element should be ordered separately

FILTRATION SURFACE - HIGHER

Inorganic microfibre	Wire mesh element
CU 400 6 A01 A N P01	CU 400 6 M25 A N P01
CU 400 6 A03 A N P01	CU 400 6 M60 A N P01
CU 400 6 A06 A N P01	
CU 400 6 A10 A N P01	
CU 400 6 A16 A N P01	
CU 400 6 A25 A N P01	

WATER REMOVAL - FILTRATION SURFACE 1 - HIGHER

Multi-Layer water absorber
CU4006WA025ANP01

Dimensions

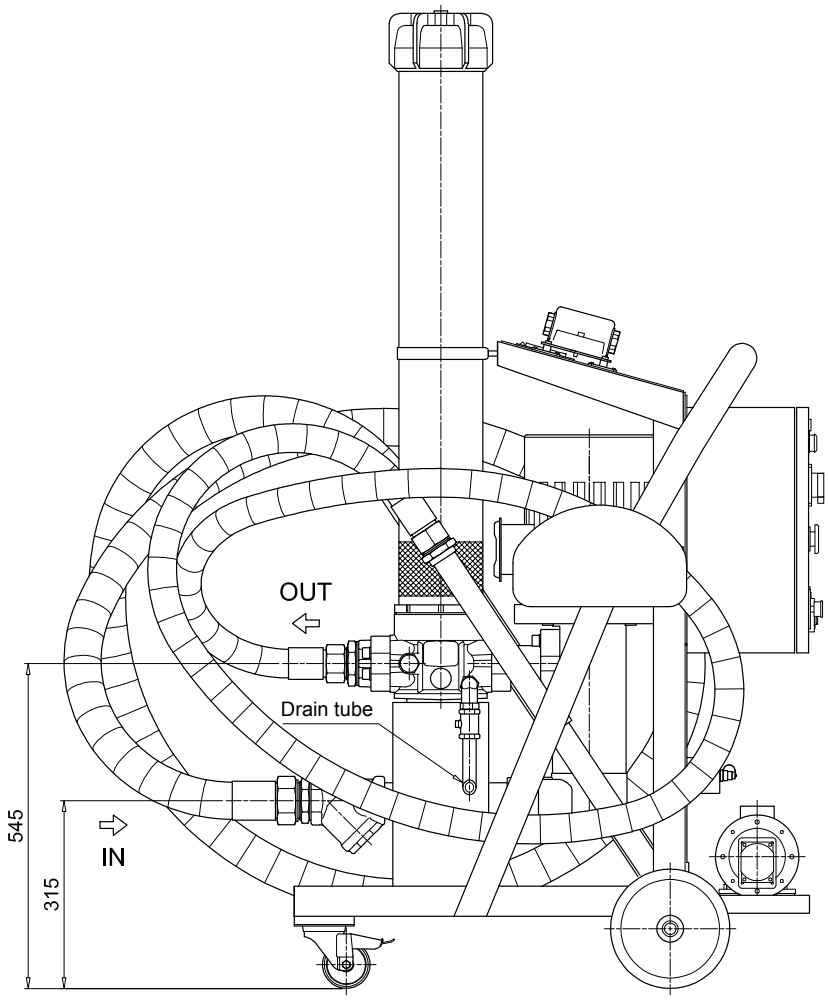

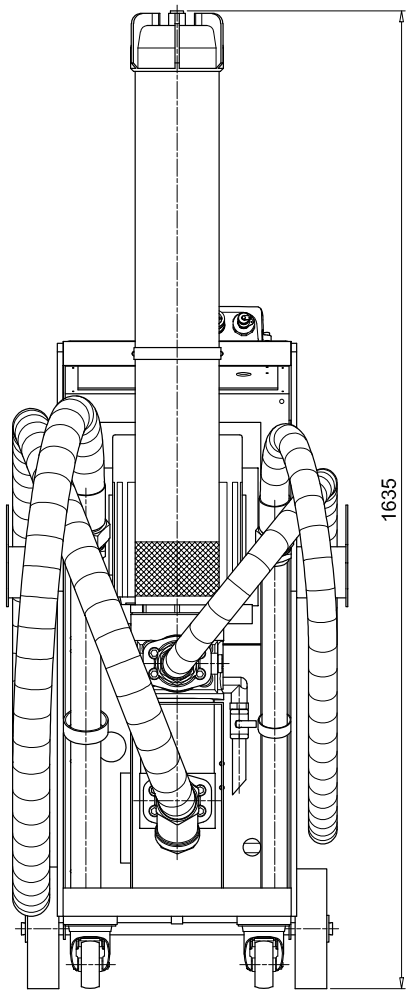

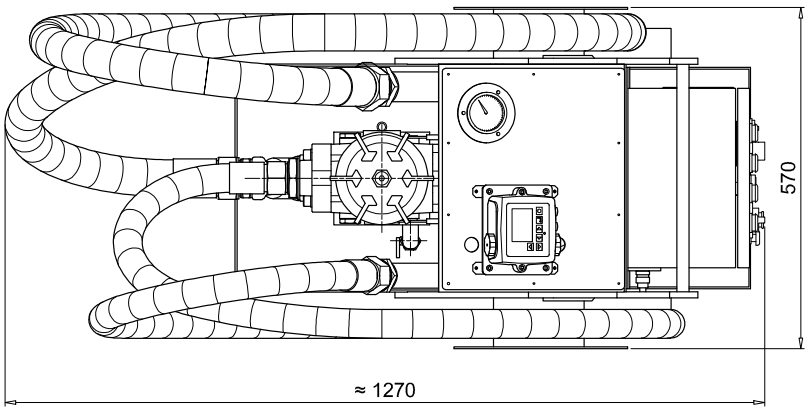

HYDRAULIC CIRCUIT

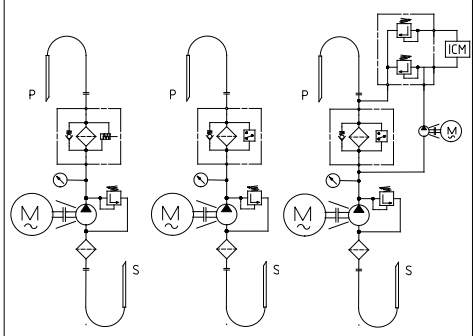

with visual differential indicator

with visual / electrical differential indicator

with ICM 2.0 particle counter

UFM 181

Mobile filtration unit 180 l/min flow rate

UFM 181 GENERAL INFORMATION

Description

Mobile filtration units

UFM 181 mobile filtration units suitable for filling and refilling of filtered hydraulic fluids and lubrication tanks.
The filter unit connected to off-line to the tank, can be used as a support to the filtration plant on start-up for fast flushing action, either as additional filtration systems with a high incidence of contamination.
Recommended maximum tank volume of 1800/2700 L.

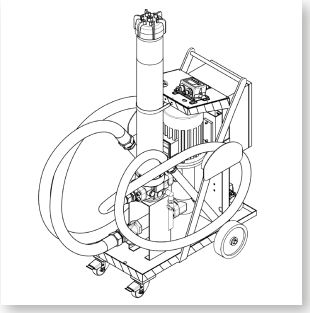

> Features & Benefits

- Compact size
- High flow
- Continue Operation Pressure 10 bar
- Easy to use
- Easy maintenance
- Reliable
- Absolute filtration
- In-line Contamination Monitor

Available in two configurations:

- configuration with start / stop automatic motor
- cut-out from differential pressure indicator - electrical / visual

- configuration with start / stop phase inverter automatic motor
- cut-out from differential pressure indicator - electrical / visual
- in-line Particle Counter ICM

Technical data

Pump
Screw pump

Electric Motor
4 kW 400/230 V three phase 2-pole

Flow (l/min)
180 l/min - 2900 r.p.m.

Max. Operation Pressure
10 bar

Viscosity range
Min. operation 10 cSt
Max. operation 800 cSt
Max. only for cold start 2000 cSt

Suction Filter
Type Y filtration 800 µm

Filtration Rating
1/3/6/10/25 µm β>1000 flow through the element Out/In

Bypass valve
Rating 3.5 bar with bypass.
The bypass can be blocked through the spigot

Fluid Temperature
From -10° to +80 °C

Ambient Temperature
From -20° to +45 °C

Protection Class
IP 55

Seal
NBR

Fluid Compatibility
Mineral Oil & Synthetic Oil - Water Glycol

Suction hose	**lance**
DN50 length 3000 mm	DN/OD50 length 700 mm

Pressure hose	**lance**
DN38 length 3000 mm	DN/OD42 length 700 mm

Weight
109 kg

Equipment
- Differential Clogging indicator - Electrical / Visual (setting 3 bar ±10%)
- Differential Clogging indicator - Electrical / Visual - with ICM 2.0 (setting 3 bar ±10%)

CE **Standard**

UFM 181

Designation & Ordering code

MOBILE FILTRATION UNIT UFM 181

Configuration example: UFM | 181 | T | A | 3 | 0 | 2 | 0 | P01

Series
UFM

Size
181 180 l/min

Electric motor
T 400/230V Three phase

Seals
A NBR

Pressure gauges and Clogging indicators
3 Manometer + Electrical/Visual Differential Clogging indicator

Filter element
0 Without element

Filtration surface
2 Higher

Option
0 No options
1 ICM 2.0 particle counter

Option
P01 MP Filtri standard
Pxx Customized

Filtration element should be ordered separately

FILTRATION SURFACE - HIGHER

Inorganic microfibre	Wire mesh element
CU 400 6 A01 A N P01	CU 400 6 M25 A N P01
CU 400 6 A03 A N P01	CU 400 6 M60 A N P01
CU 400 6 A06 A N P01	
CU 400 6 A10 A N P01	
CU 400 6 A16 A N P01	
CU 400 6 A25 A N P01	

WATER REMOVAL - FILTRATION SURFACE 1 - HIGHER

Multi-Layer water absorber
CU4006WA025ANP01

Dimensions

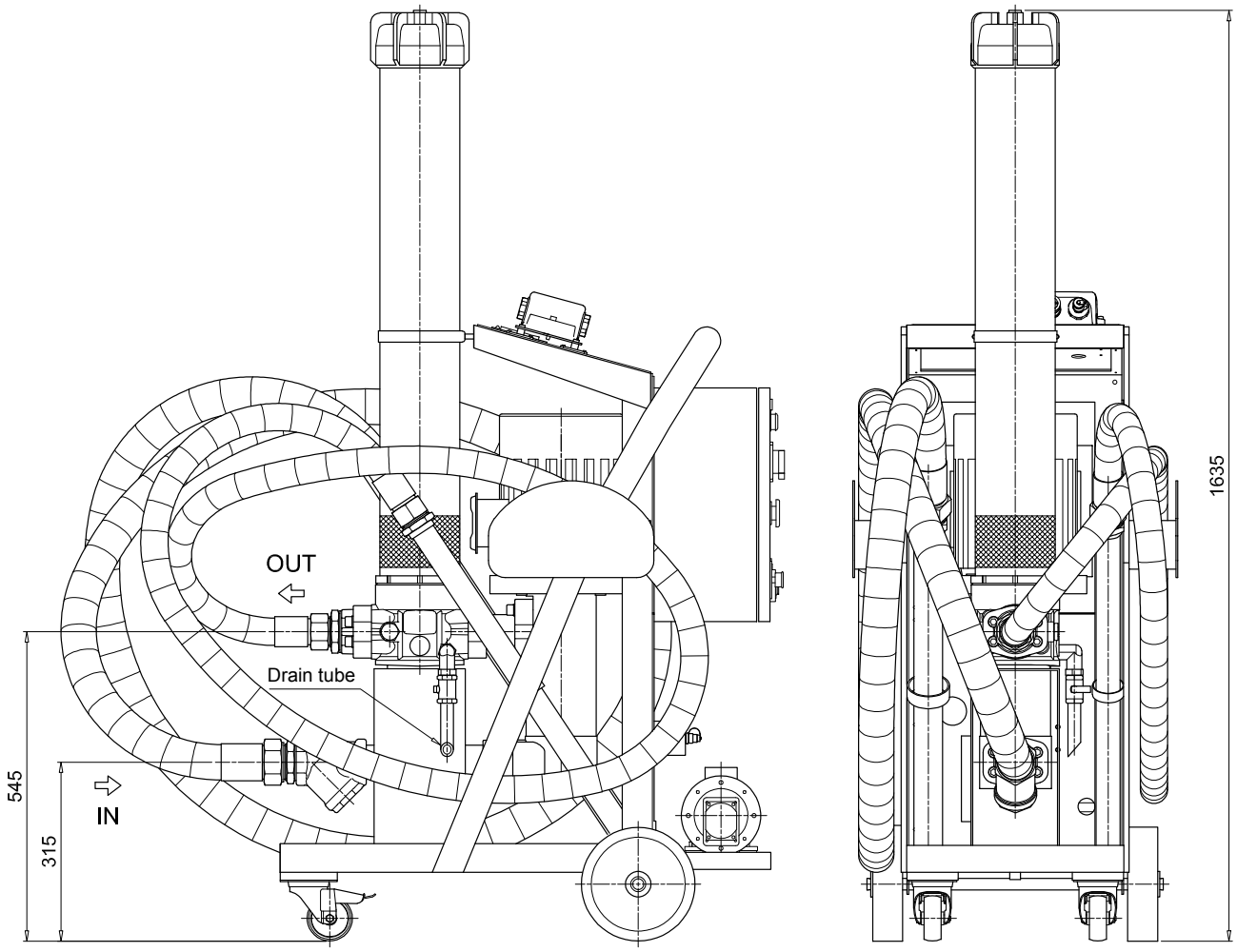

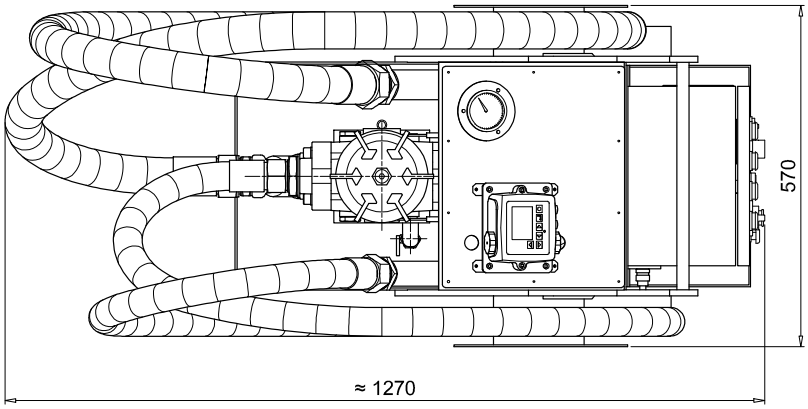

HYDRAULIC CIRCUIT

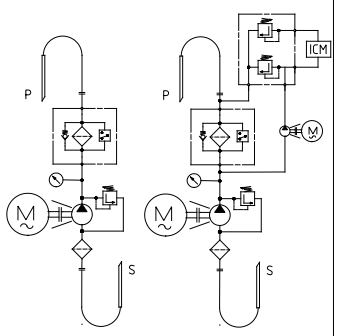

with visual / electrical differential indicator

with ICM 2.0 particle counter

UFM 919

Mobile filtration unit 90/180 l/min flow rate

Description

Mobile filtration units

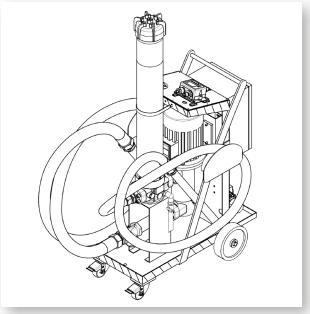

UFM 919 mobile filtration units suitable for filling and refilling of filtered hydraulic fluids and lubrication tanks.
The filter unit connected to off-line to the tank, can be used as a support to the filtration plant on start-up for fast flushing action, either as additional filtration systems with a high incidence of contamination.
Two-speed electric motor with programmable flow of 90 or 180 l/min.

> Features & Benefits

- Compact size
- High flow
- Continue Operation Pressure 10 bar
- Easy to use
- Easy maintenance
- Reliable
- Absolute filtration
- In-line Contamination Monitor

Possible applications

- Flow rate 90 l/min for filling or topping up tanks with a volume of less than 1000 liters
- Flow rate 90 l/min for depollution of tanks with a volume of less than 1000 liters
- Flow rate 90 l / min for the treatment of high viscosity oils
- Flow rate 90 l / min for a cold start phase then flow rate 180 l/min after temperature rise.
- Flow rate 180 l/min for filling or topping up tanks with a volume greater than 2000 liters
- Flow rate 180 l/min for the depollution of tanks with a volume of less than 2000 liters

Available in two configurations:

- configuration with start / stop automatic motor
- cut-out from differential pressure indicator - electrical / visual

- configuration with start / stop phase inverter automatic motor
- cut-out from differential pressure indicator - electrical / visual
- in-line Particle Counter ICM 2.0

Technical data

Pump
Screw pump

Electric Motor
3.7/5 kW 400/230 V three phase 2/4-pole

Flow (l/min)
90 l/min - 1450 r.p.m. / 180 l/min - 2900 r.p.m.

Max. Operation Pressure
10 bar

Viscosity range
Min. operation 10 cSt
Max. operation 800 cSt
Max. only for cold start 2000 cSt

Suction Filter
Type Y filtration 800 µm

Filtration Rating
1/3/6/10/25 µm β>1000 flow through the element Out/In

Bypass valve
Rating 3.5 bar with bypass.
The bypass can be blocked through the spigot

Fluid Temperature
From -10° to +80 °C

Ambient Temperature
From -20° to +45 °C

Protection Class
IP 55

Seal
NBR

Fluid Compatibility
Mineral Oil & Synthetic Oil - Water Glycol

Suction hose	lance	lance 90°
DN50 length 3000 mm	DN/OD50 length 700 mm	DN/OD40 length 700 mm

Pressure hose	lance
DN38 length 3000 mm	DN/OD42 length 700 mm

Weight
120 kg

Equipment
- Differential Clogging indicator - Electrical / Visual (setting 3 bar ±10%)
- Differential Clogging indicator - Electrical / Visual - with ICM 2.0 (setting 3 bar ±10%)

CE **Standard**

UFM 919

Designation & Ordering code

MOBILE FILTRATION UNIT UFM 919

Configuration example: UFM 919 T A 3 0 2 0 P01

Series
UFM

Size
919 90-180 l/min

Electric motor
T 400/230V Three phase - 2/4 pole

Seals
A NBR

Pressure gauges and Clogging indicators
3 Manometer + Electrical/Visual Differential Clogging indicator

Filter element
0 Without element

Filtration surface
2 Higher

Option
0 No options
1 ICM 2.0 particle counter

Option
P01 MP Filtri standard
Pxx Customized

Filtration element should be ordered separately

FILTRATION SURFACE - HIGHER

Inorganic microfibre	Wire mesh element
CU 400 6 A01 A N P01	CU 400 6 M25 A N P01
CU 400 6 A03 A N P01	CU 400 6 M60 A N P01
CU 400 6 A06 A N P01	
CU 400 6 A10 A N P01	
CU 400 6 A16 A N P01	
CU 400 6 A25 A N P01	

WATER REMOVAL - FILTRATION SURFACE 1 - HIGHER

Multi-Layer water absorber
CU4006WA025ANP01

Dimensions

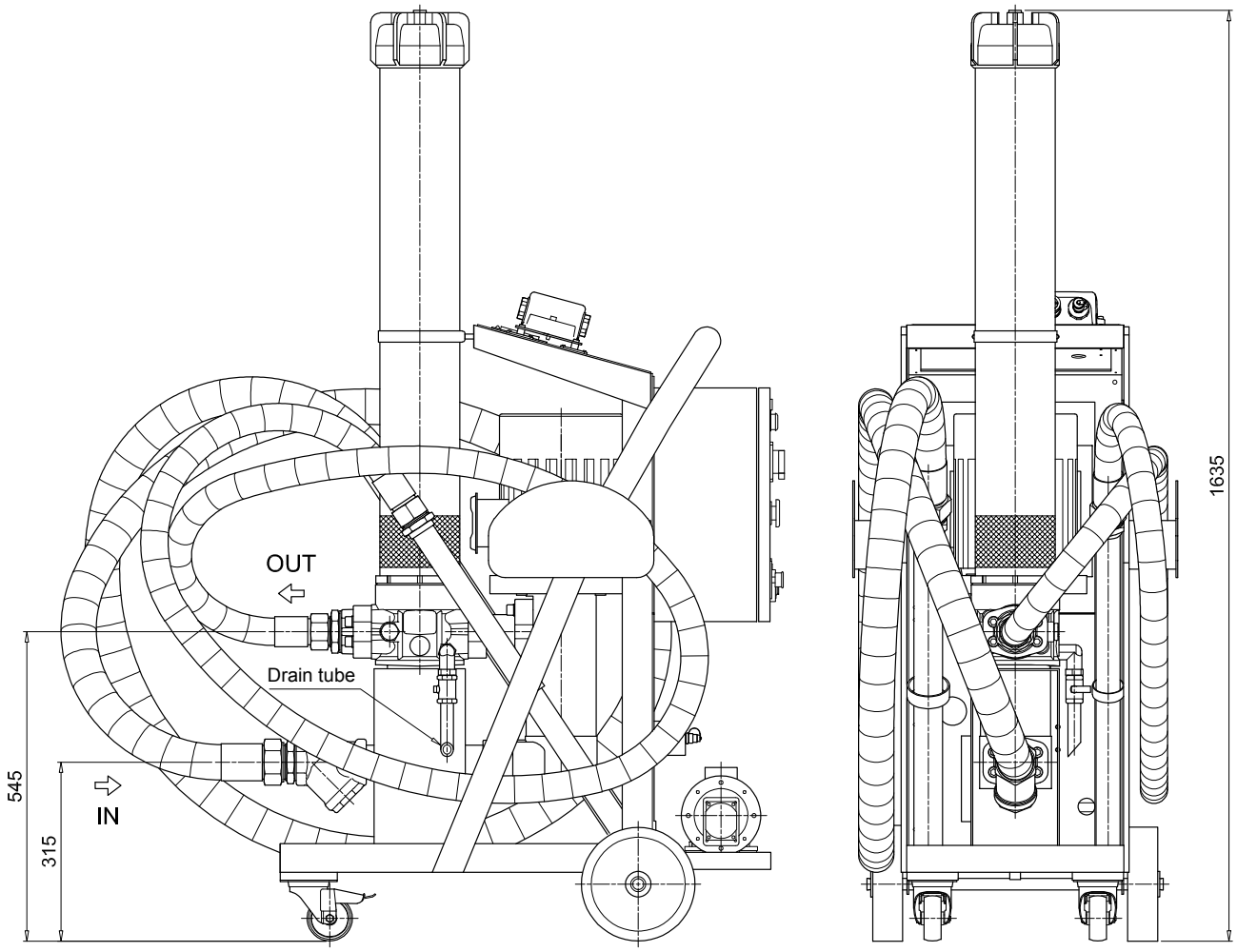

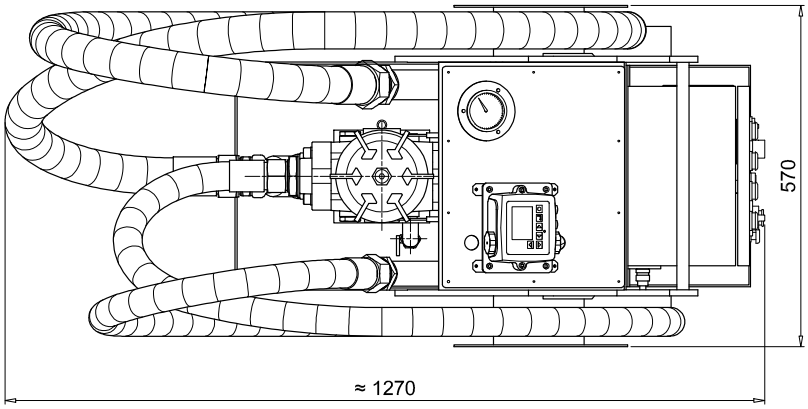

HYDRAULIC CIRCUIT

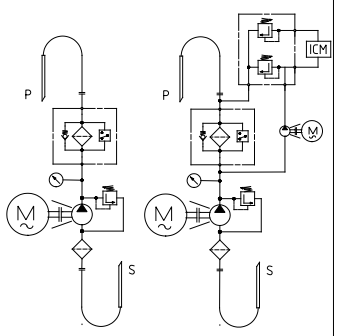

with visual / electrical differential indicator

with ICM 2.0 particle counter

FTU 080

Fluid transfer unit with ICM 2.0 (In-line Contamination Monitor)

Description

Fluid Transfer Unit

FTU 080 Fluid Transfer unit suitable for filling, recirculation - via onboard 80L reservoir - and emptying of filtered hydraulic fluids and lubrication tanks.

The FTU can be utilised either as additional filtration to a system with a high incidence of contamination, or can be used as a standalone recirculating filtration circuit to clean fluid to a predetermined contamination level - monitored by the onboard ICM - prior to transfer of fluid to the system.

> Features & Benefits

- Compact size
- Easy to use
- Easy maintenance
- Reliable
- Absolute filtration
- In-line Contamination Monitor

Possible applications

- Low flow rate for filling of reservoirs
- Low-flow filtration for off-line tanks
- Pre filtration ability of fluid prior to filling of hydraulic system

Technical data

Pump
Gear pump

Electric Motor
0.75kW 1400rpm, 110/230V single phase

Flow (l/min)
15 l/min

Max. Operation Pressure
3.5 bar

Inlet
Inlet (pump protection) filtration steel 250µm strainer

Viscosity
150 cSt maximum fluid viscosity

Suction Filter
250 µm metal mesh strainers

Bypass valve
Rating 3.5 bar with bypass

Filtration
Water removal "spin-on" type, bypass set at 1.75 bar.
In-line filtration 3 µm absolute β 1000 element bypass set at 3 bar.

Filtration rating
See designation order for cartridge and filter elements

Control
Electrical Control Box

Indicator
Delivery line electric cut out switch

Ambient Temperature
From -10 °C to 80 °C

Working temperature
From 0 °C to 40 °C

Protection Class
IP 55

Seal
NBR

Fluid Compatibility
Mineral oil compatible - please contact sales team for queries about other fluids

Hoses
Flexible hoses - SAE100R4 1" BSP swaged females 2mtr long hose

Oil level
Sight glass and filler with integrated electric float cut out switch

Weight
200 kg

Mounting
Heavy duty trolley and wheels

CE **Standard**

FTU 080

Designation & Ordering code

FLUID TRANSFER UNIT FTU

Configuration example: FTU | 1 | 1 | 15 | 2 | 1 | M250 | SL4305

Mobile filtration unit
FTU Fluid Transfer Unit

Onboard reservoir
1 80 litres

In-line contamination monitor
1 With ICM

Flow rate
15 15 l/min

Motor power
2 0.75 kW, 1400 rpm

Voltage
1 110V - 50Hz single phase
2 240V - 50Hz single phase

Inlet filtration
M250 250 µm suction strainer (internal of reservoir)

Outlet filtration
SL4305 Single spin on plus LMP length 5

Filtration element is not included and should be ordered separately.

Outlet filtration options:
LMP: CU400 5 A03, A06, A10, A16, A25 - **SPIN-ON**: CS150 A03, A06, A10, A25 - CS150 P10, P25 - **WATER REMOVAL**: CW150 P10, P25

CARTRIDGE STANDARD LENGTH

Inorganic microfibre	Wire mesh element
CS 100 A01 A P01	CS 100 M25 A P01
CS 100 A03 A P01	CS 100 M60 A P01
CS 100 A06 A P01	
CS 100 A10 A P01	
CS 100 A25 A P01	

CARTRIDGE EXTENDED LENGTH

Inorganic microfibre	Wire mesh element
CS 150 A01 A P01	CS 150 M25 A P01
CS 150 A03 A P01	CS 150 M60 A P01
CS 150 A06 A P01	
CS 150 A10 A P01	
CS 150 A25 A P01	

LMP FILTER ELEMENT - LENGTH 5

Inorganic microfibre
CU 400 5 A03 A N P01
CU 400 5 A10 A N P01
CU 400 5 A16 A N P01
CU 400 5 A25 A N P01

WATER REMOVAL - CARTRIDGE EXTENDED LENGTH

Multi-Layer water absorber
CW150P10A

Dimensions

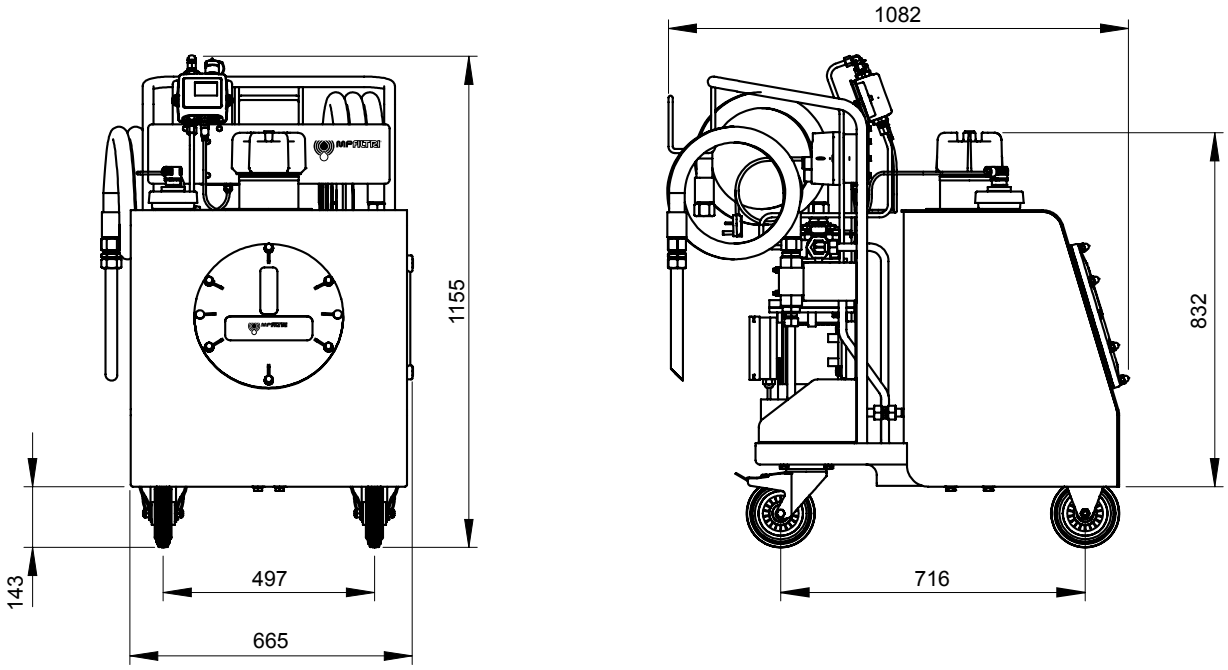

HYDRAULIC CIRCUIT

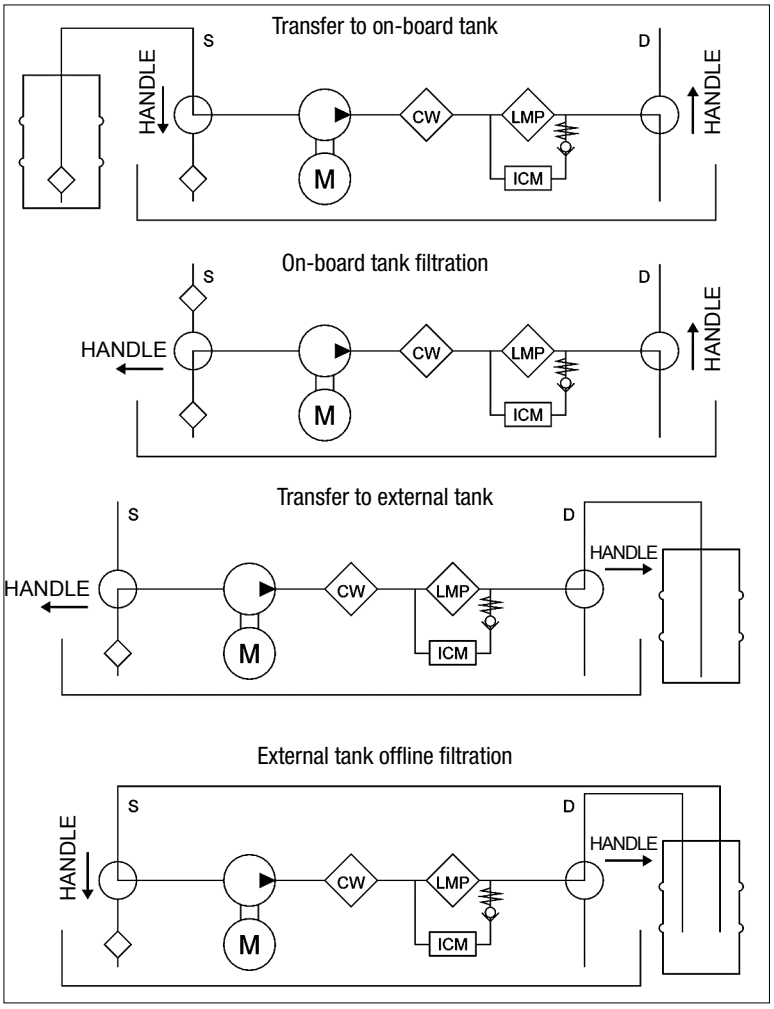

All data, details and words contained in this publication are provided for information purposes only.
MP Filtri reserves the right to make modifications to the models and versions of the described products at any time for both technical and / or commercial reasons.
The colors and the pictures of the products are purely indicative.
Any reproduction, partial or total, of this document is strictly forbidden.
All rights are strictly reserved.

WORLDWIDE NETWORK

HEADQUARTERS

MP Filtri S.p.A.
Pessano con Bornago
Milano - Italy
+39 02 957031
sales@mpfiltri.it

BRANCH OFFICES

ITALFILTRI LLC
Moscow - Russia
+7 (495) 220 94 60
mpfiltrirussia@yahoo.com

MP Filtri Canada Inc.
Concord - Ontario - Canada
+1 905 303 1369
sales@mpfiltricanada.com

MP Filtri France SAS
Villeneuve la Garenne
France
+33 (0)1 40 86 47 00
sales@mpfiltrifrance.com

MP Filtri Germany GmbH
St. Ingbert - Germany
+49 (0) 6894 95652-0
sales@mpfiltri.de

MP Filtri India Pvt. Ltd.
Bangalore - India
+91 80 4147 7444 / +91 80 4146 1444
sales@mpfiltri.co.in

MP Filtri (Shanghai) Co., Ltd.
Shanghai - Minhang District - China
+86 21 58919916 116
sales@mpfiltrishanghai.com

MP Filtri U.K. Ltd.
Bourton on the Water
Gloucestershire - United Kingdom
+44 (0) 1451 822 522
sales@mpfiltri.co.uk

MP Filtri U.S.A. Inc.
Quakertown, PA - U.S.A.
+1 215 529 1300
sales@mpfiltriusa.com

PASSION TO PERFORM

mpfiltri.com

CMPEN001M
EN - Rev. 12-2020