FRI series

Maximum working pressure up to 2 MPa (20 bar) - Flow rate up to 2500 l/min

TYPICAL FILTER SIZING Selection Software

Step 1 Select “FILTERS”

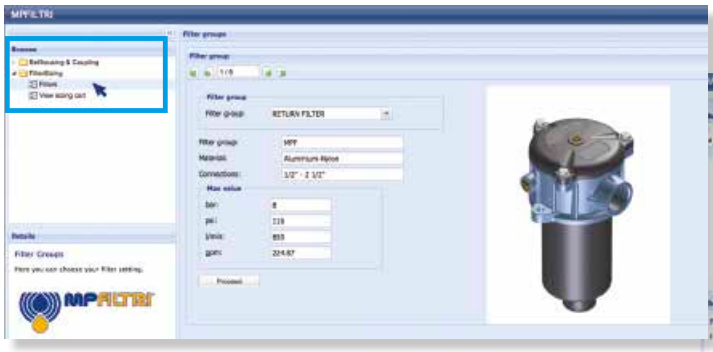

Step 2 Choose filter group (Return Filter, Pressure Filter, etc.)

Step 3 Choose filter type (MPF, MPT, etc.) in function of the max working pressure and the max flow rate

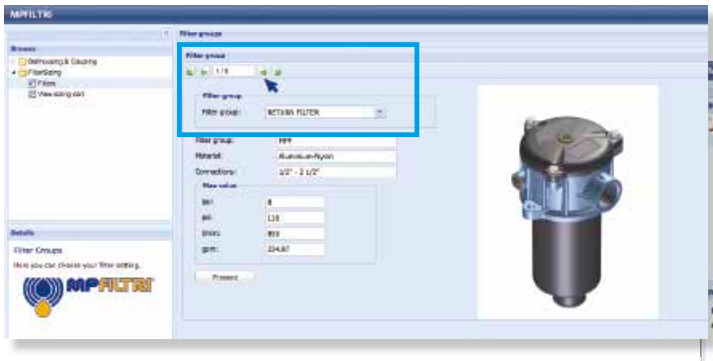

Step 4 Push “PROCEED”

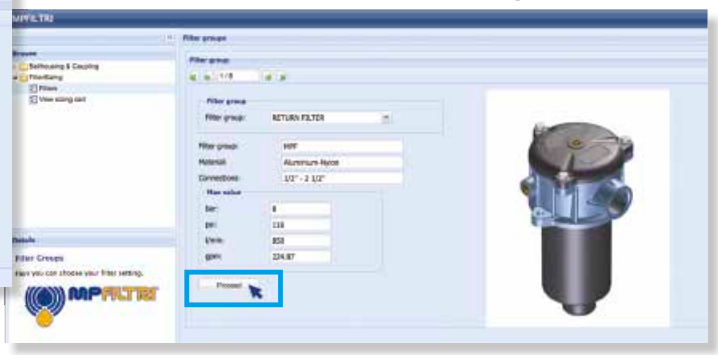

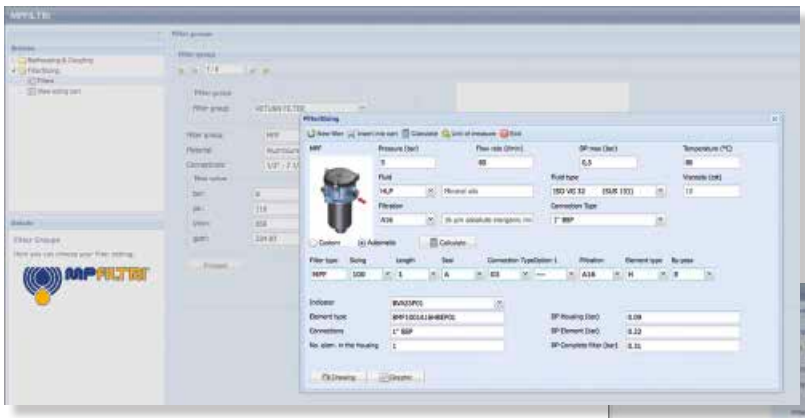

Step 5

Insert all application data to calculate the filter size following the sequence:

- working pressure
- working flow rate
- working pressure drop
- working temperature
- fluid material and fluid type
- filtration media
- connection type

Step 6

Push “CALCULATE” to have result; in case of any mistake, the system will advice which parameter is out of range to allow to modify/adjust the selection

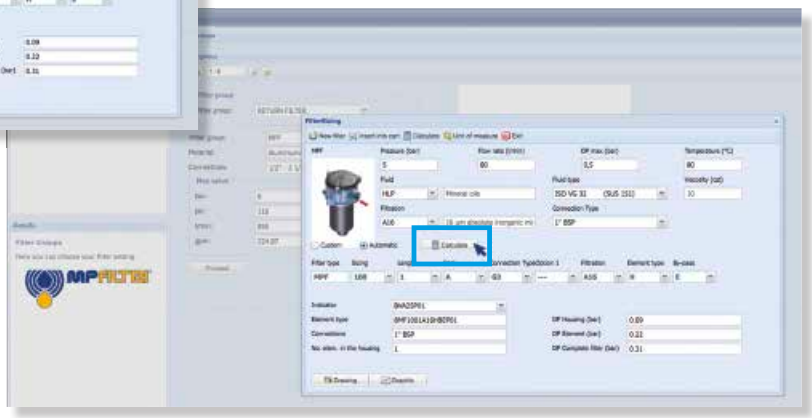

Step 7

Download PDF Datasheet “Report.aspx” pushing the button “Drawing”

FRI GENERAL INFORMATION

Description

Return filter

Maximum working pressure up to 2 MPa (20 bar)
Flow rate up to 2500 l/min

FRI is a range of return filters for protection of the reservoir against the system contamination.
They could be directly fixed to the reservoir in immersed or semi-immersed position or connected to the lines of the system through the hydraulic fittings.
The filter output must be always immersed into the fluid to avoid aeration or foam generation into the reservoir.

Available features:
- Female threaded connections up to 2 1/2" and flanged connections up to 3 1/2", for a maximum flow rate of 1500 l/min
- Double input connections, to connect several return lines or drains
- Fine filtration rating, to get a good cleanliness level into the reservoir
- Bypass valve, to relieve excessive pressure drop across the filter media
- Visual, electrical and electronic differential clogging indicators

Common applications:
Heavy duty industrial equipment

Technical data

Filter housing materials
- Filter body
  Aluminium: FRI 255
  Anodized Aluminium: FRI 025-040-100-250-630
  Phosphatized Steel: FRI 850

- Cover
  Polyamide, GF reinforced: FRI 255
  Anodized Aluminium: FRI 025-040-100-250-630-850

- Valve: Polyamide, GF reinforced - Steel

Bypass valve
Opening pressure 240 kPa (2.4 bar) ±10%

Δp element type
- Microfibre filter elements - series N: 10 bar
- Fluid flow through the filter element from OUT to IN

Seals
- Standard NBR series A
- Optional FPM series V

Temperature
From -25 °C to +110 °C

Note
FRI filters are provided for vertical mounting

Weights [kg] and volumes [dm³]

Filter series	Weights [kg]	Volumes [dm³]
	Length 1	Length 1
FRI 025	1.0	0.28
FRI 040	2.0	0.70
FRI 100	3.8	1.09
FRI 250	6.3	2.60
FRI 255	4.2	3.20
FRI 630	13.8	7.05
FRI 850	48.0	21.50

FILTER ASSEMBLY SIZING
Flow rates [l/min]

		Filter element design - N Series							
Filter series	Length	A03	A06	A10	A16	A25	M25 M60 M90	P10	P25
FRI 025	**1**	6	10	17	19	43	122	43	47
FRI 040	**1**	19	23	43	45	94	155	94	102
FRI 100	**1**	32	34	89	92	187	260	187	206
FRI 250	**1**	144	179	271	300	448	645	448	490
FRI 255	**1**	144	179	271	300	448	645	448	490
FRI 630	**1**	242	279	508	577	834	1446	834	911
FRI 850	**1**	440	541	971	1143	1705	2528	1705	1880

Maximum flow rate for a complete return filter with a pressure drop Δp = 0.5 bar.
The reference fluid has a kinematic viscosity of 30 mm^2/s (cSt) and a density of 0.86 kg/dm^3.
For different pressure drop or fluid viscosity we recommend to use our selection software available on www.mpfiltri.com.
You can also calculate the right size using the formulas present on the FILTER SIZING paragraph at the beginning of the full catalogue or at the beginning of the filter family brochure.
Please, contact our Sales Department for further additional information.

Hydraulic symbols

Filter series	Style 1 connection + Diff. indic.	Style 2 connections + Diff. indic.
FRI 025		•
FRI 040		•
FRI 100		•
FRI 250		•
FRI 255	•	
FRI 630		•
FRI 850	•	

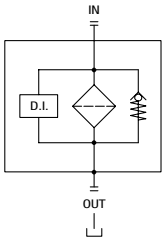

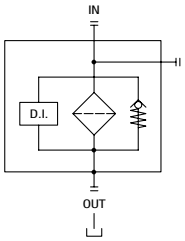

Pressure drop

Filter housings Δp pressure drop

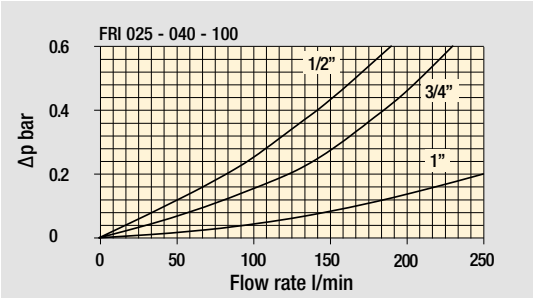

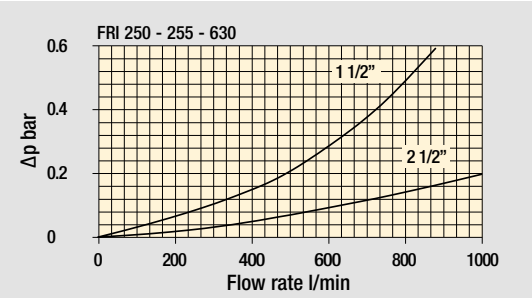

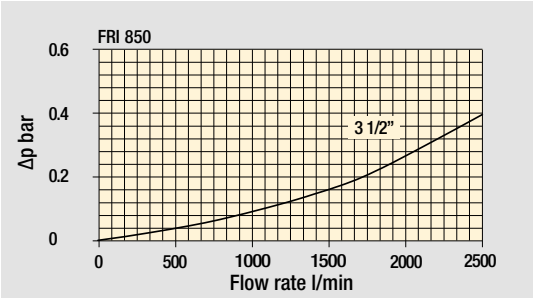

Bypass valve pressure drop

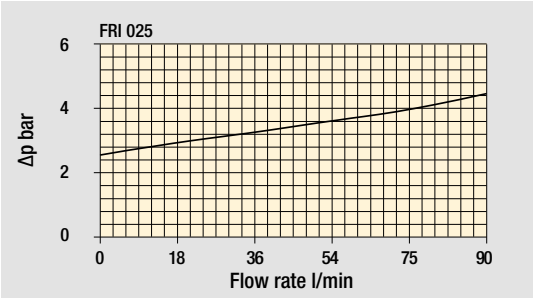

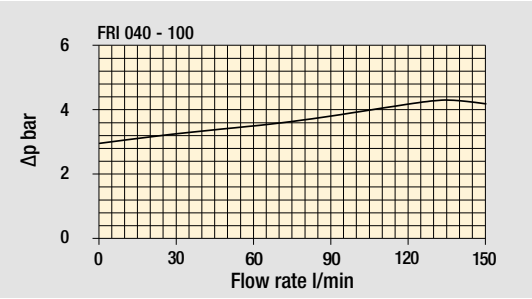

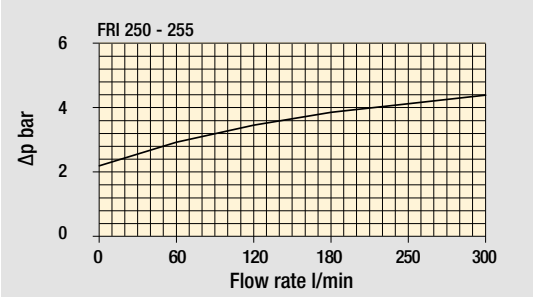

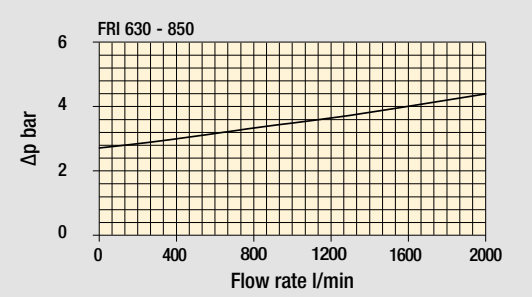

The curves are plotted using mineral oil with density of 0.86 kg/dm^3 in compliance with ISO 3968. Δp varies proportionally with density.

Designation & Ordering code

COMPLETE FILTER

Configuration example 1:	FRI025	B	A	G1	A25	N	P01
Configuration example 2:	FRI040	S	W	G2	M25	N	P01

Series and size

FRI025
FRI040

Bypass valve

B With bypass
S Without bypass

Seals and treatments

		Filtration rating Axx	Mxx	Pxx
A NBR		•	•	•
V FPM		•	•	•
W NBR head anodized	filter element compatible with fluids HFA-HFB-HFC	•	•	
Z FPM head anodized	filter element compatible with fluids HFA-HFB-HFC	•	•	

Connections for FRI025	Connections for FRI040
G1 G 1/2”	G 3/4”
G2 1/2” NPT	3/4” NPT
G3 SAE 8 - 3/4” - 16 UNF	SAE 12 - 1 1/16” - 12 UN

Filtration rating (filter media)

A03 Inorganic microfiber 3 µm	**M25** Wire mesh 25 µm
A06 Inorganic microfiber 6 µm	**M60** Wire mesh 60 µm
A10 Inorganic microfiber 10 µm	**M90** Wire mesh 90 µm
A16 Inorganic microfiber 16 µm	**P10** Resin impregnated paper 10 µm
A25 Inorganic microfiber 25 µm	**P25** Resin impregnated paper 25 µm

Element Δp

N 10 bar

Execution

P01 MP Filtri standard
Pxx Customized

FILTER ELEMENT

Configuration example 1:	CU025	A25	N	P01
Configuration example 2:	CU040	M25	W	P01

Element series and size

CU025
CU040

Filtration rating (filter media)

A03 Inorganic microfiber 3 µm	**M25** Wire mesh 25 µm
A06 Inorganic microfiber 6 µm	**M60** Wire mesh 60 µm
A10 Inorganic microfiber 10 µm	**M90** Wire mesh 90 µm
A16 Inorganic microfiber 16 µm	**P10** Resin impregnated paper 10 µm
A25 Inorganic microfiber 25 µm	**P25** Resin impregnated paper 25 µm

Seals and treatments

		Filtration rating Axx	Mxx	Pxx
N NBR		•	•	•
V FPM		•	•	•
W NBR	filter element compatible with fluids HFA-HFB-HFC	•	•	
Z FPM	filter element compatible with fluids HFA-HFB-HFC	•	•	

Execution

P01 MP Filtri standard
Pxx Customized

ACCESSORIES

Indicators		page
DEA	Electrical differential indicator	242
DEM	Electrical differential indicator	242-243
DLA	Electrical / visual differential indicator	243-244
DLE	Electrical / visual differential indicator	244
DTA	Electronic differential indicator	245
DVA	Visual differential indicator	245
DVM	Visual differential indicator	245

Additional features		page
T2	Plug	246

Dimensions

FRI025

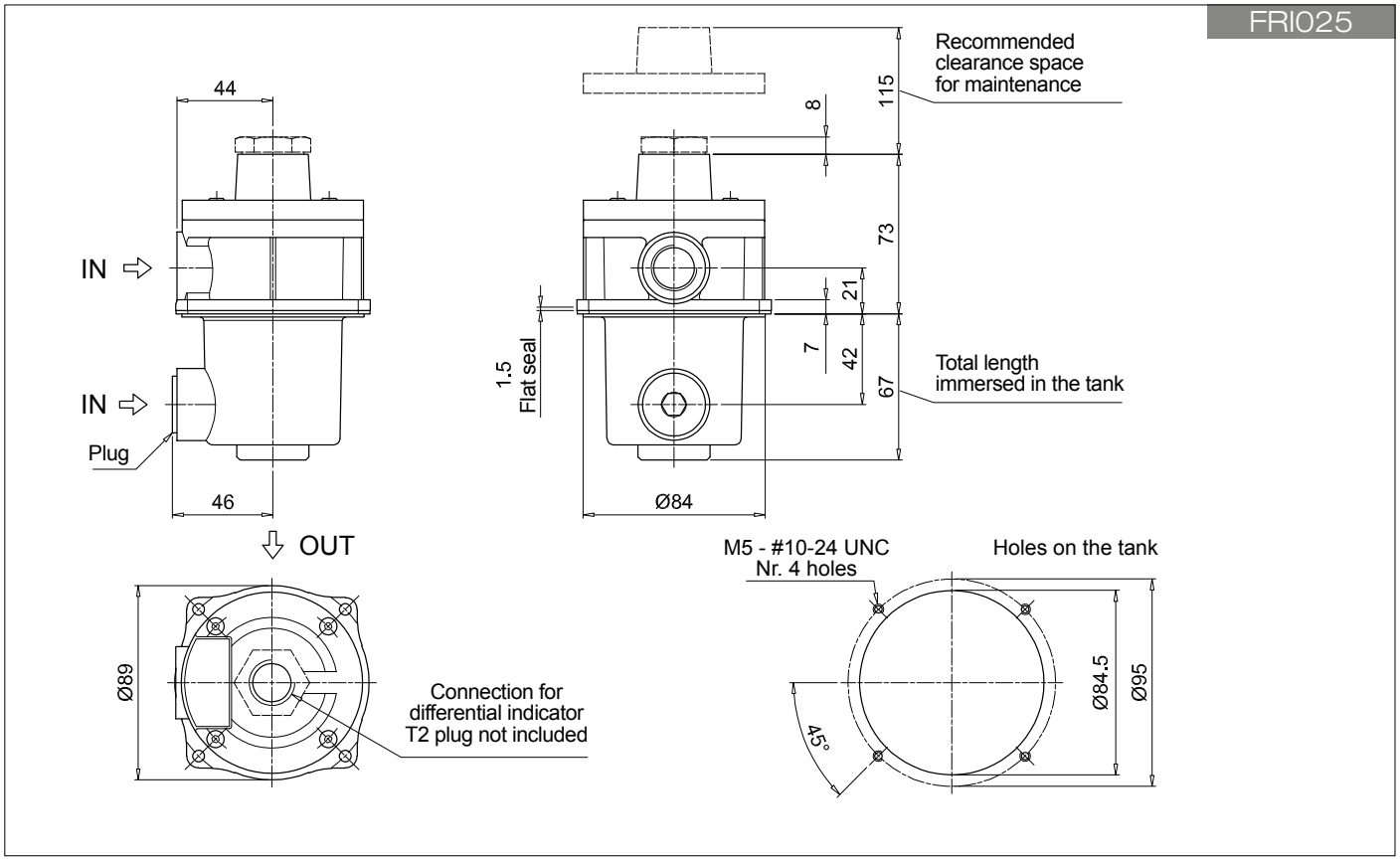

FRI040

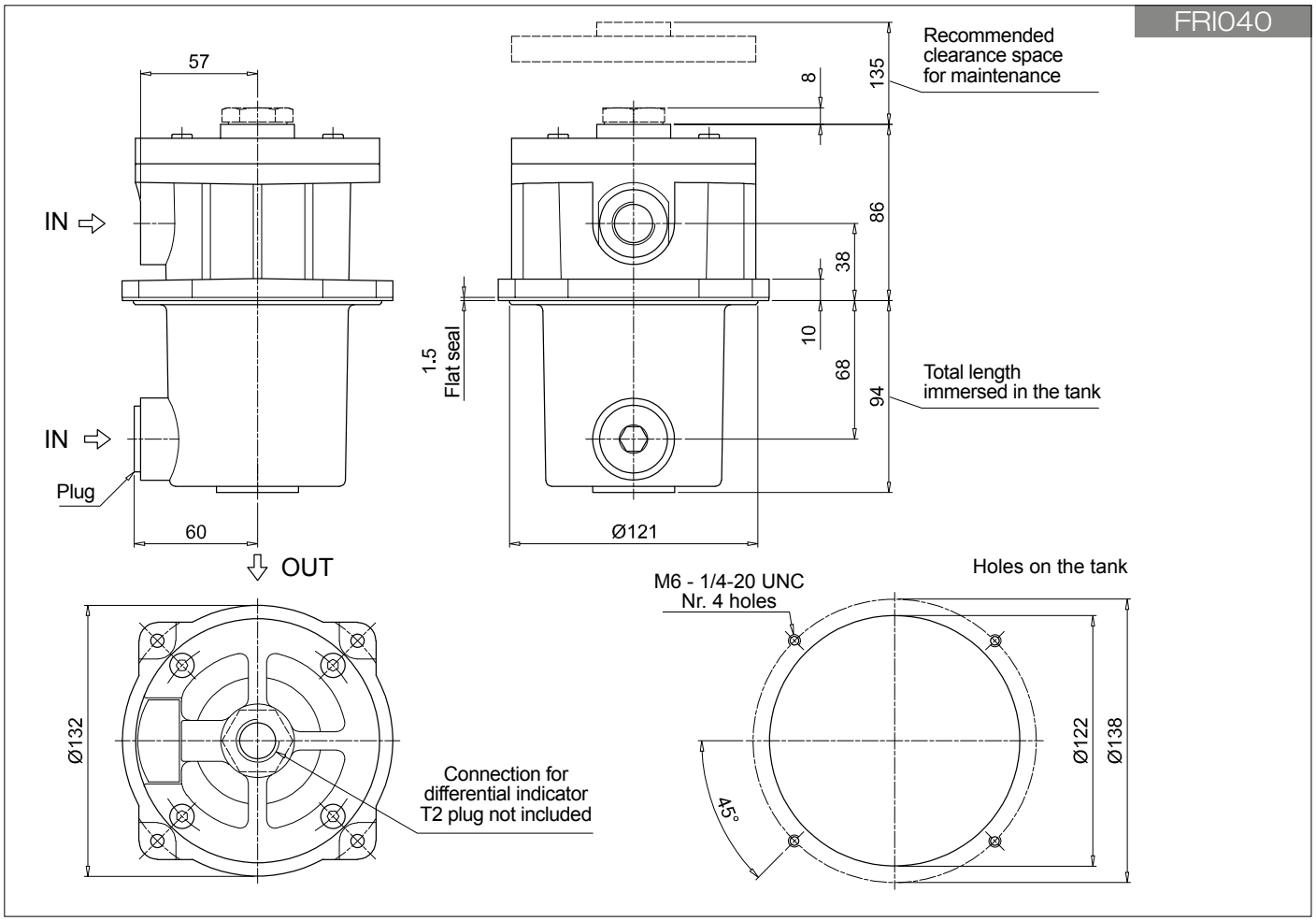

Designation & Ordering code

COMPLETE FILTER

Configuration example 1:	FRI100	B	A	G1	A25	N	P01
Configuration example 2:	FRI630	S	W	F2	M25	N	P01

Series and size

FRI100
FRI250
FRI630

Bypass valve

B With bypass
S Without bypass

Seals and treatments		Filtration rating Axx	Mxx	Pxx
A NBR		•	•	•
V FPM		•	•	•
W NBR head anodized	filter element compatible with fluids HFA-HFB-HFC	•	•	
Z FPM head anodized	filter element compatible with fluids HFA-HFB-HFC	•	•	

Connections for FRI100	Connections for FRI250	Connections for FRI630
G1 G 1”	G 1 1/2”	G 2 1/2”
G2 1” NPT	1 1/2” NPT	2 1/2” NPT
G3 SAE 16 - 1 5/16” - 12 UN	SAE 24 - 1 7/8” - 12 UN	SAE 32 - 2 1/2” - 12 UN
F1 1” SAE 3000 psi/M	1 1/2” SAE 3000 psi/M	2 1/2” SAE 3000 psi/M
F2 1” SAE 3000 psi/UNC	1 1/2” SAE 3000 psi/UNC	2 1/2” SAE 3000 psi/UNC

Filtration rating (filter media)

A03	Inorganic microfiber 3 µm	**M25**	Wire mesh 25 µm
A06	Inorganic microfiber 6 µm	**M60**	Wire mesh 60 µm
A10	Inorganic microfiber 10 µm	**M90**	Wire mesh 90 µm
A16	Inorganic microfiber 16 µm	**P10**	Resin impregnated paper 10 µm
A25	Inorganic microfiber 25 µm	**P25**	Resin impregnated paper 25 µm

Element Δp

N 10 bar

Execution

P01 MP Filtri standard
Pxx Customized

FILTER ELEMENT

Configuration example 1:	CU100	A25	N	P01
Configuration example 2:	CU630	M25	W	P01

Element series and size

CU100
CU250
CU630

Filtration rating (filter media)

A03	Inorganic microfiber 3 µm	**M25**	Wire mesh 25 µm
A06	Inorganic microfiber 6 µm	**M60**	Wire mesh 60 µm
A10	Inorganic microfiber 10 µm	**M90**	Wire mesh 90 µm
A16	Inorganic microfiber 16 µm	**P10**	Resin impregnated paper 10 µm
A25	Inorganic microfiber 25 µm	**P25**	Resin impregnated paper 25 µm

Seals and treatments		Filtration rating Axx	Mxx	Pxx
N NBR		•	•	•
V FPM		•	•	•
W NBR	filter element compatible with fluids HFA-HFB-HFC	•	•	
Z FPM	filter element compatible with fluids HFA-HFB-HFC	•	•	

Execution

P01 MP Filtri standard
Pxx Customized

ACCESSORIES

Indicators		page
DEA	Electrical differential indicator	242
DEM	Electrical differential indicator	242-243
DLA	Electrical / visual differential indicator	243-244
DLE	Electrical / visual differential indicator	244
DTA	Electronic differential indicator	245
DVA	Visual differential indicator	245
DVM	Visual differential indicator	245

Additional features		page
T2	Plug	246

FRI100
Threaded connections "G"

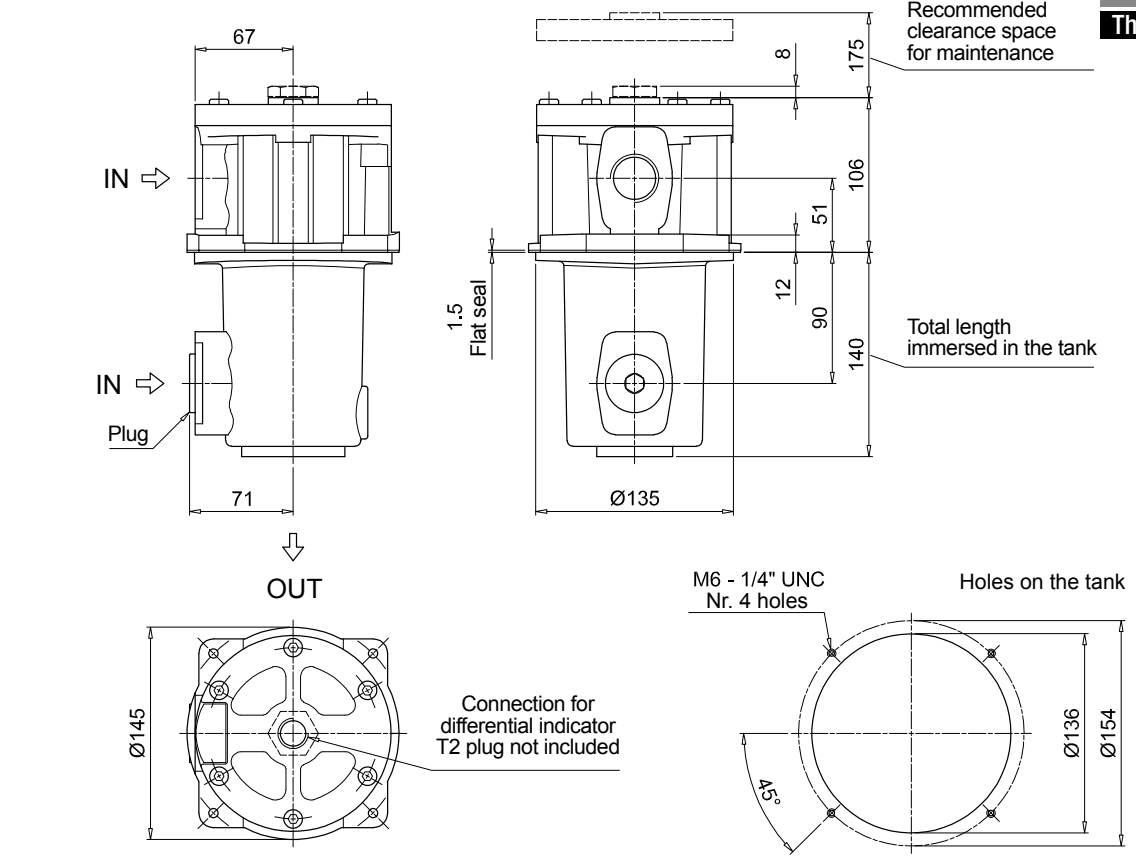

FRI100
Flange connections "F"

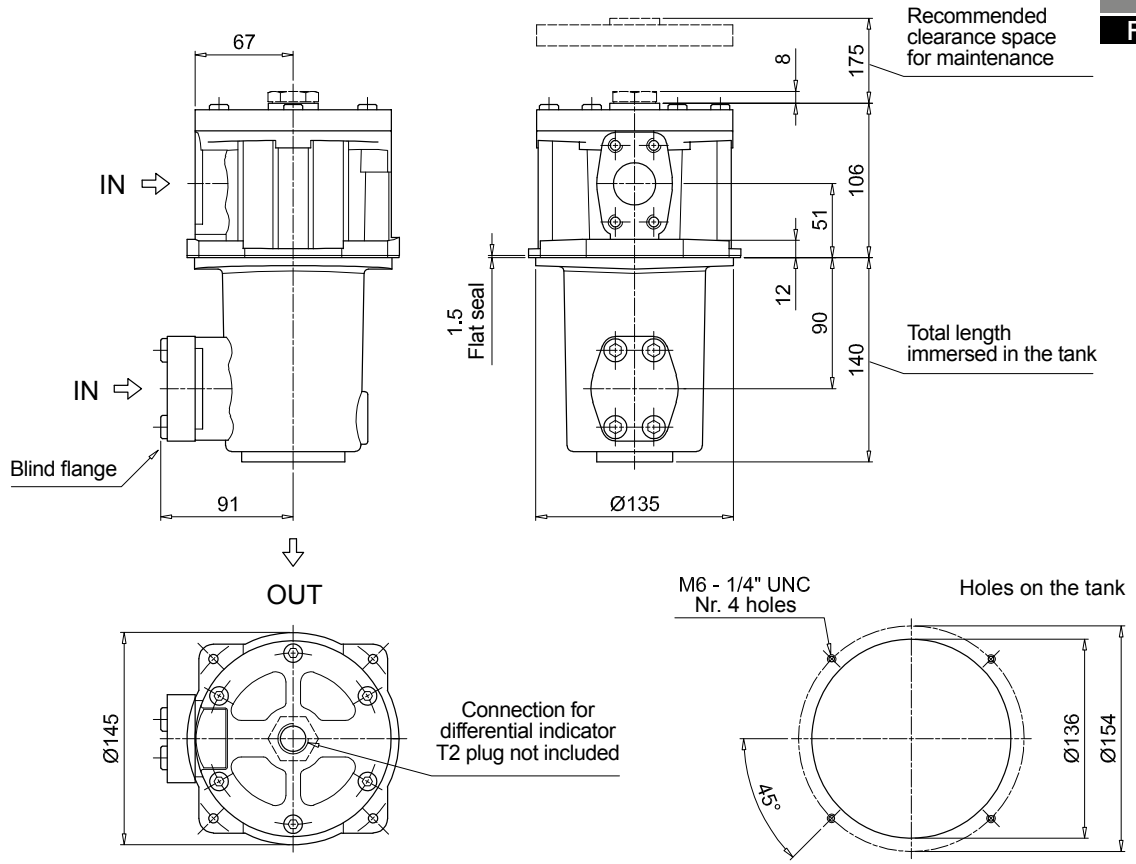

Dimensions

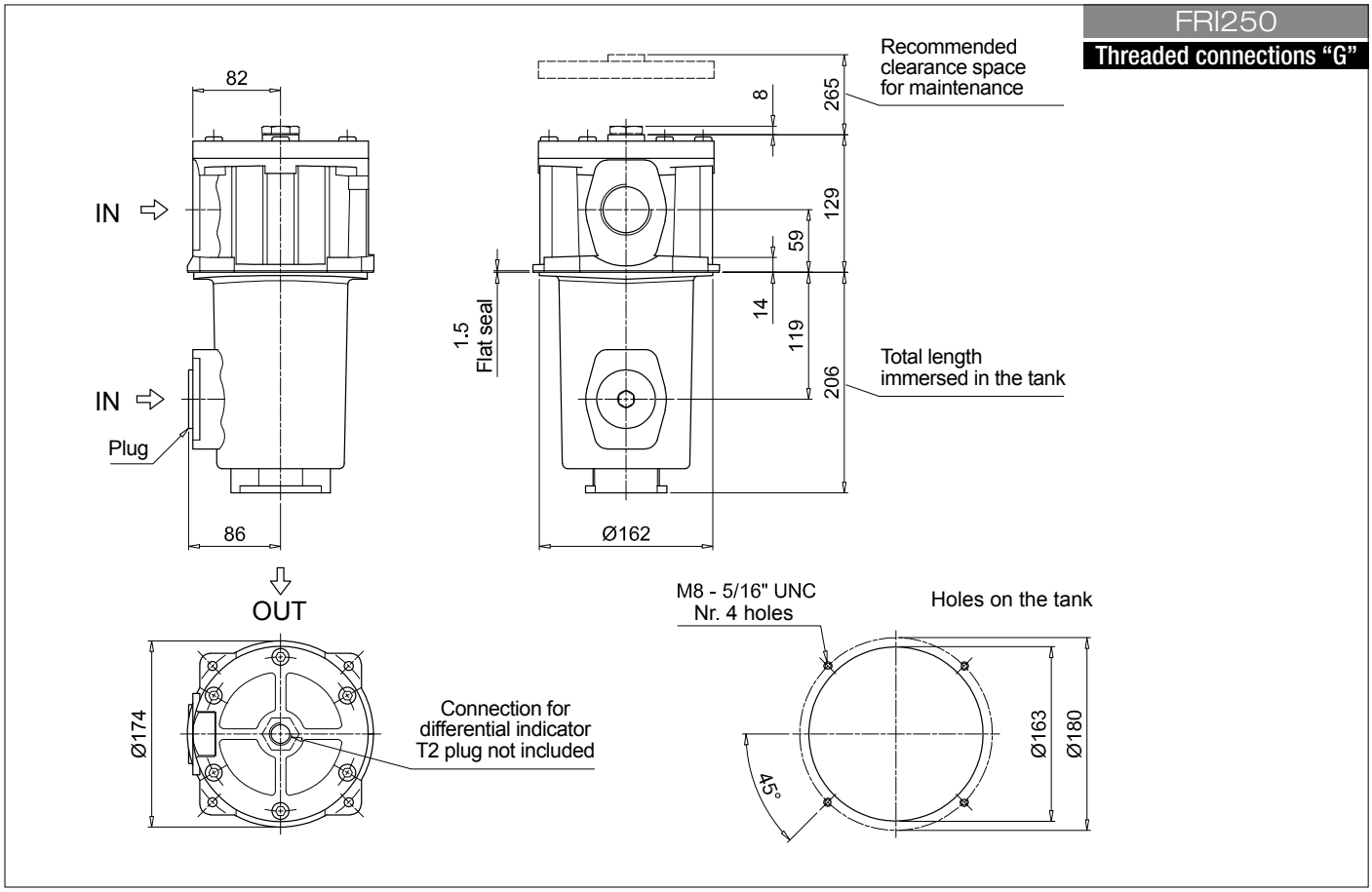
FRI250
Threaded connections "G"
82
IN
IN
Plug
86
OUT
Ø174
Connection for
differential indicator
T2 plug not included
Recommended
clearance space
for maintenance
8
265
129
59
14
119
206
1.5
Flat seal
Total length
immersed in the tank
Ø162
M8 - 5/16" UNC
Nr. 4 holes
Holes on the tank
45°
Ø163
Ø180

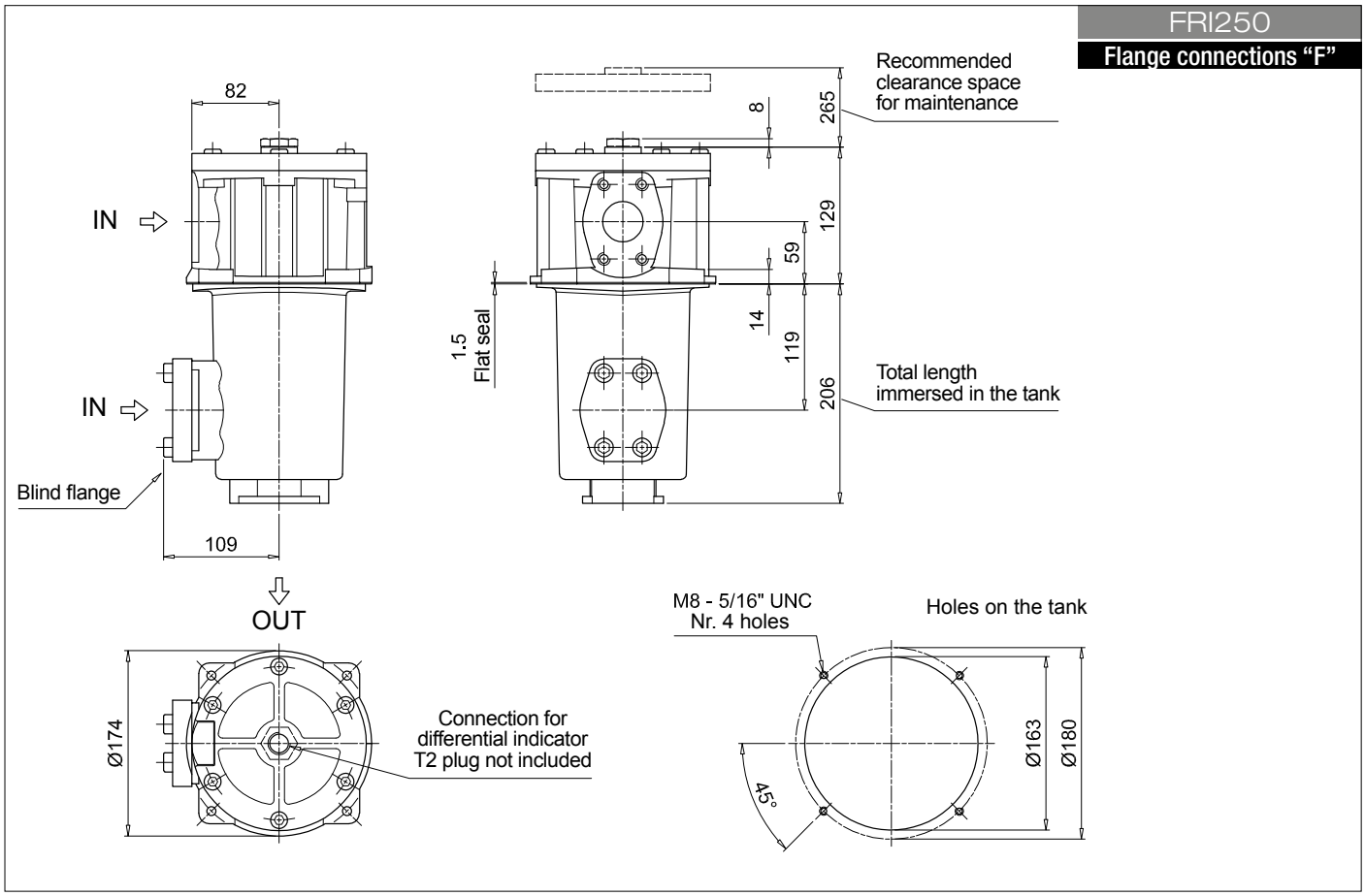
FRI250
Flange connections "F"
82
IN
IN
Blind flange
109
OUT
Ø174
Connection for
differential indicator
T2 plug not included
Recommended
clearance space
for maintenance
8
265
129
59
14
119
206
1.5
Flat seal
Total length
immersed in the tank
M8 - 5/16" UNC
Nr. 4 holes
Holes on the tank
45°
Ø163
Ø180

FRI630
Threaded connections "G"

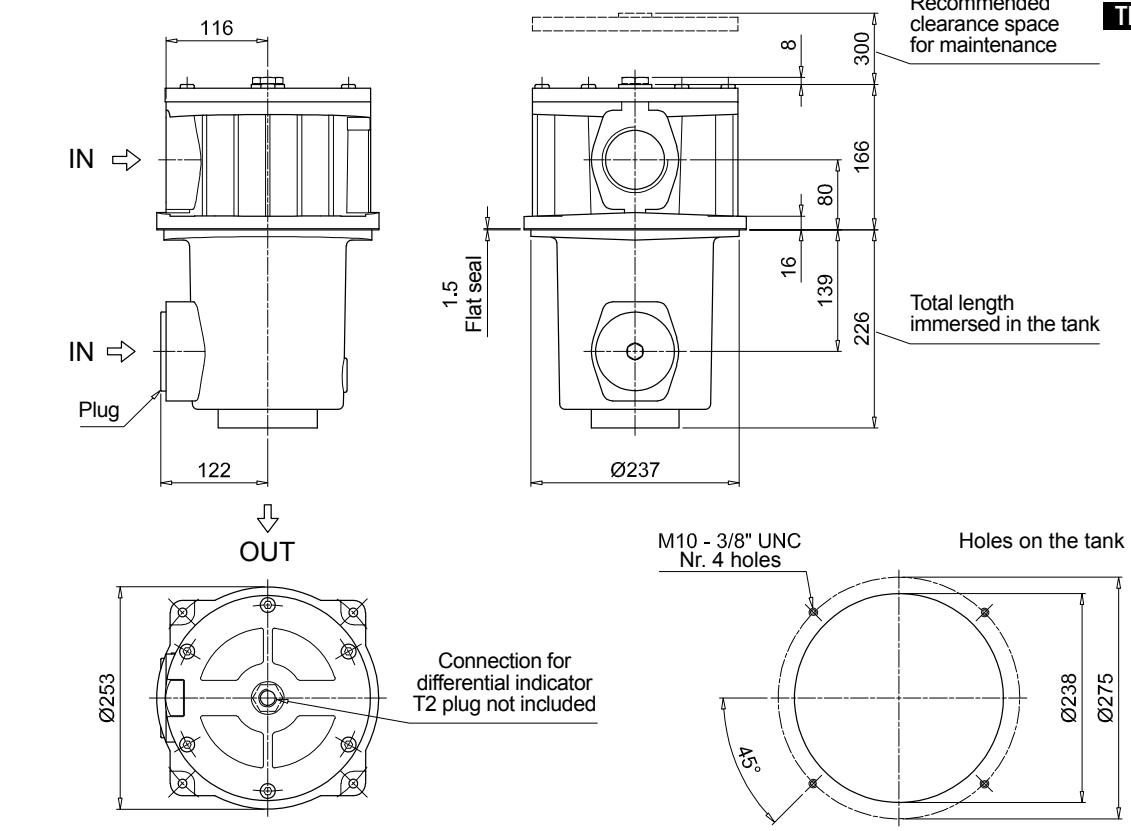

FRI630
Flange connections "F"

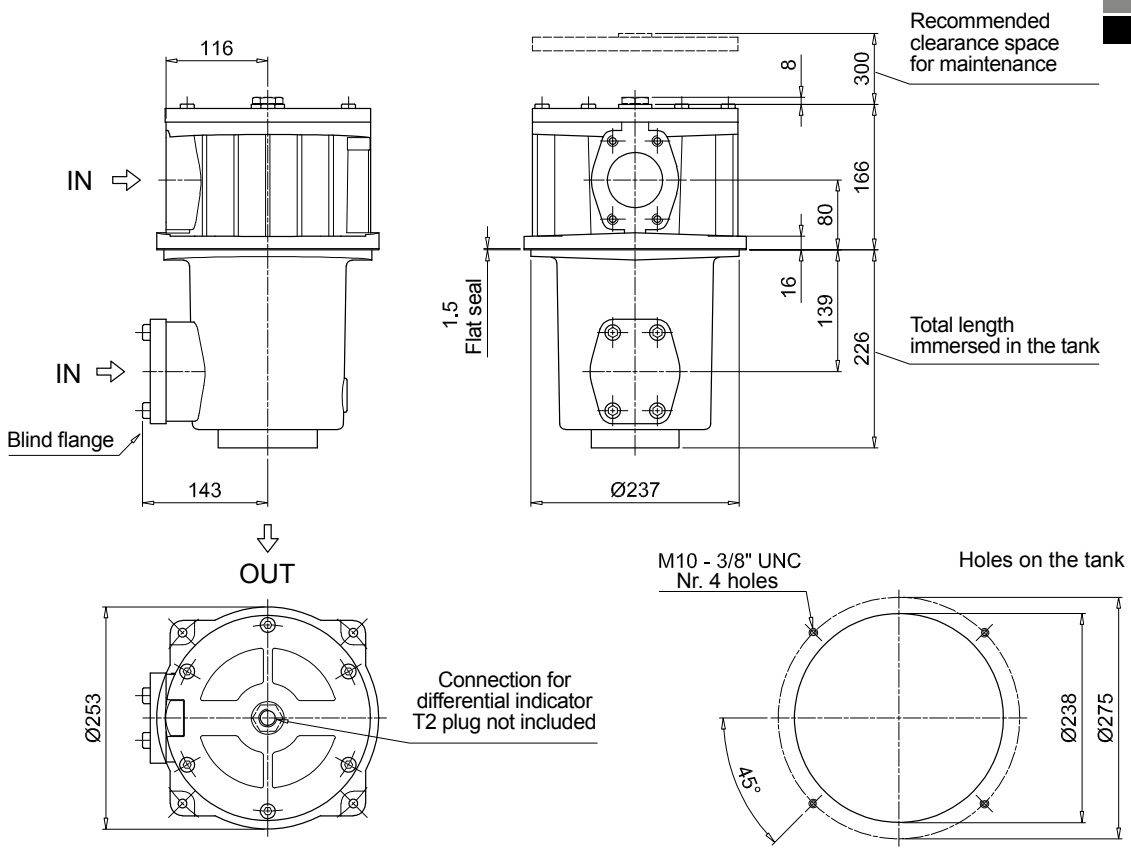

Designation & Ordering code

COMPLETE FILTER

Configuration example 1:	FRI255	S	W	F2	M25	N	P01
Configuration example 2:	FRI850	B	A	F1	A25	N	P01

Series and size

FRI255
FRI850

Bypass valve

B With bypass
S Without bypass

Seals and treatments

		Axx	Mxx	Pxx
A NBR		•	•	•
V FPM		•	•	•
W NBR head anodized	filter element compatible with fluids HFA-HFB-HFC	•	•	
Z FPM head anodized	filter element compatible with fluids HFA-HFB-HFC	•	•	

Filtration rating

Connections for FRI255

G1 G 1 1/2"
G2 1 1/2" NPT
G3 SAE 24 - 1 7/8" - 12 UN
G4 G 1 1/4"
G5 1 1/4" NPT
G6 SAE 20 - 1 5/8" - 12 UN
F1 1 1/2" SAE 3000 psi/M
F2 1 1/2" SAE 3000 psi/UNC

Connections for FRI850

F1 3 1/2" SAE 3000 psi/M
F2 3 1/2" SAE 3000 psi/UNC

Filtration rating (filter media)

A03 Inorganic microfiber 3 µm
A06 Inorganic microfiber 6 µm
A10 Inorganic microfiber 10 µm
A16 Inorganic microfiber 16 µm
A25 Inorganic microfiber 25 µm
M25 Wire mesh 25 µm
M60 Wire mesh 60 µm
M90 Wire mesh 90 µm
P10 Resin impregnated paper 10 µm
P25 Resin impregnated paper 25 µm

Element Δp

N 10 bar

Execution

P01 MP Filtri standard
Pxx Customized

FILTER ELEMENT

Configuration example 1:	CU250	M25	W	P01
Configuration example 2:	CU850	A25	N	P01

Element series and size

CU250
CU850

Filtration rating (filter media)

A03 Inorganic microfiber 3 µm
A06 Inorganic microfiber 6 µm
A10 Inorganic microfiber 10 µm
A16 Inorganic microfiber 16 µm
A25 Inorganic microfiber 25 µm
M25 Wire mesh 25 µm
M60 Wire mesh 60 µm
M90 Wire mesh 90 µm
P10 Resin impregnated paper 10 µm
P25 Resin impregnated paper 25 µm

Seals and treatments

		Axx	Mxx	Pxx
N NBR		•	•	•
V FPM		•	•	•
W NBR	filter element compatible with fluids HFA-HFB-HFC	•	•	
Z FPM	filter element compatible with fluids HFA-HFB-HFC	•	•	

Filtration rating

Execution

P01 MP Filtri standard
Pxx Customized

FRI255 ACCESSORIES

Indicators		page
BVA	Axial pressure gauge	240
BVR	Radial pressure gauge	240
BVP	Visual pressure indicator with automatic reset	241
BVQ	Visual pressure indicator with manual reset	241
BEA	Electrical pressure indicator	239
BEM	Electrical pressure indicator	239
BLA	Electrical / visual pressure indicator	239-240

FRI850 ACCESSORIES

Indicators		page
DEA	Electrical differential indicator	242
DEM	Electrical differential indicator	242-243
DLA	Electrical / visual differential indicator	243-244
DLE	Electrical / visual differential indicator	244
DTA	Electronic differential indicator	245
DVA	Visual differential indicator	245
DVM	Visual differential indicator	245

Additional features		page
T2	Plug	246

FRI255

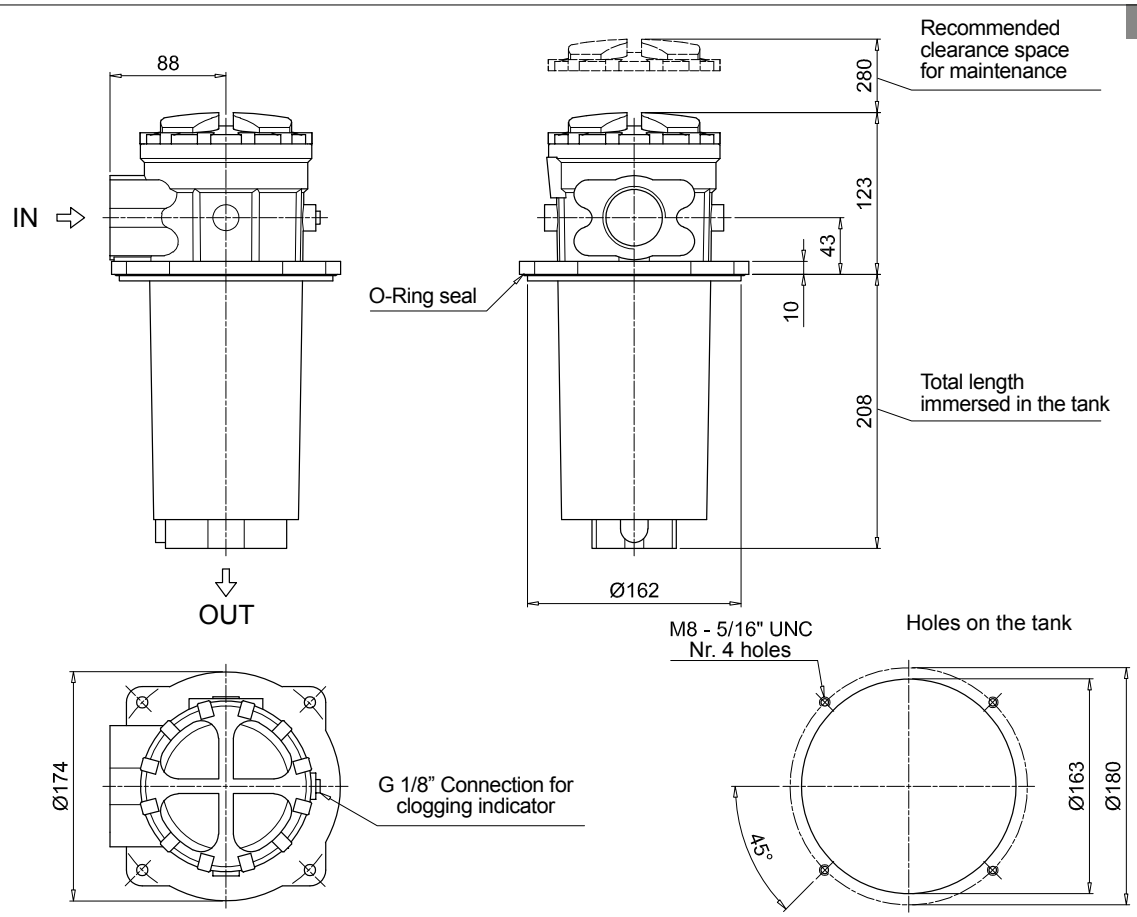

FRI850

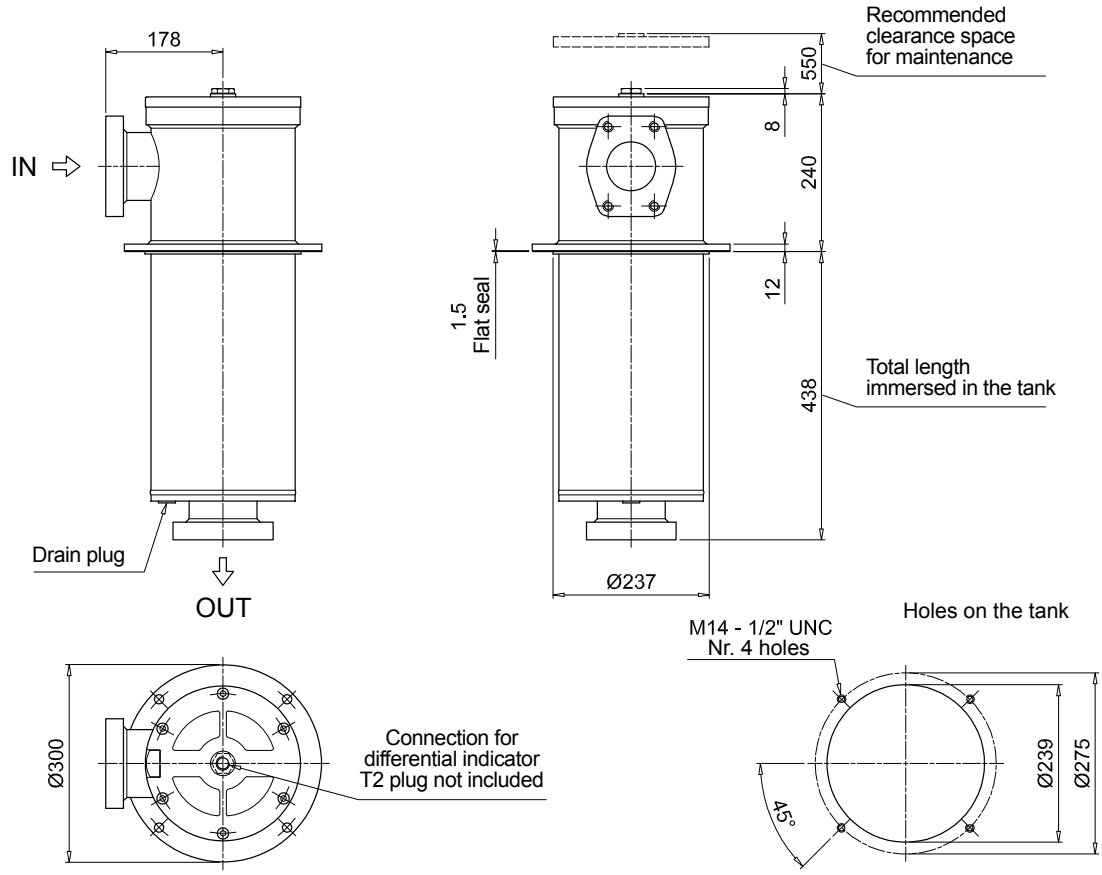

Order number for spare parts

FRI 025 - 040

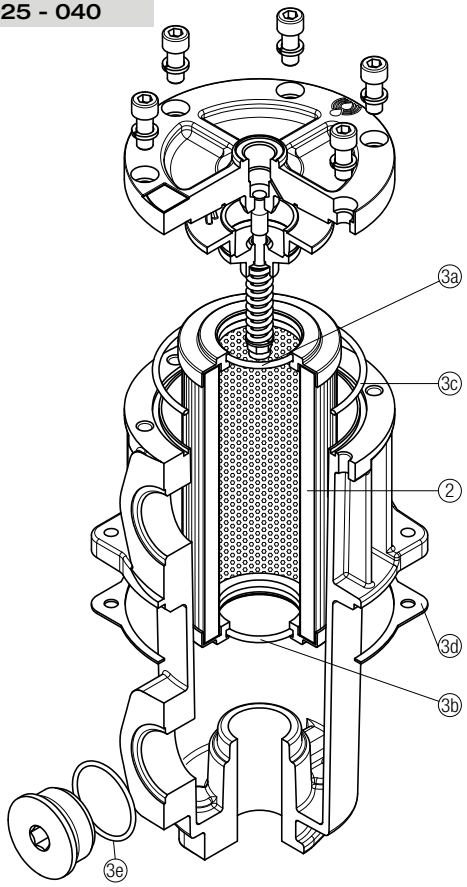

Item:	Q.ty: 1 pc. 2	Q.ty: 1 pc. 3 (3a ÷ 3e)	
Filter series	Filter element	Seal Kit code number NBR	FPM
FRI 025	See order table	02050213	02050220
FRI 040		02050214	02050221

FRI 100 - 250 - 630

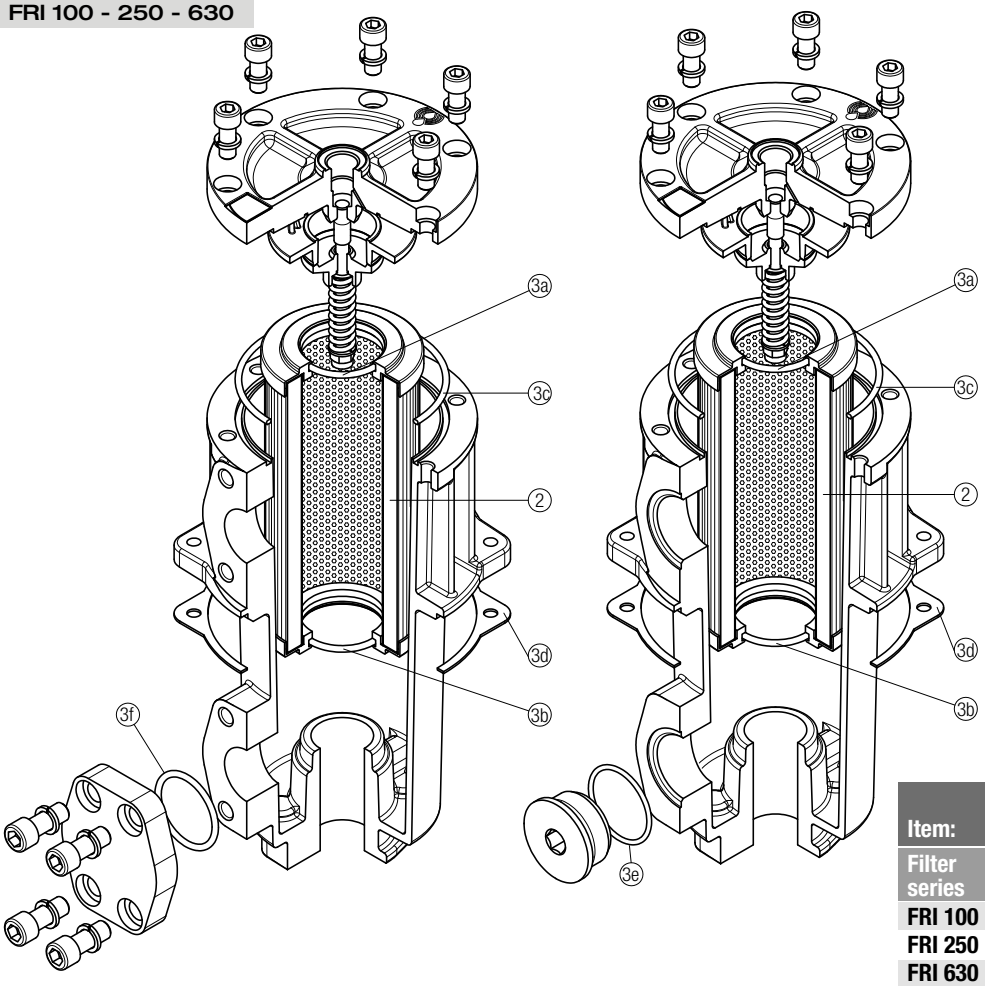

Item:	Q.ty: 1 pc. 2	Q.ty: 1 pc. 3 (3a ÷ 3f)	
Filter series	Filter element	Seal Kit code number NBR	FPM
FRI 100	See order table	02050215	02050222
FRI 250		02050216	02050223
FRI 630		02050217	02050224

Order number for spare parts

FRI 255

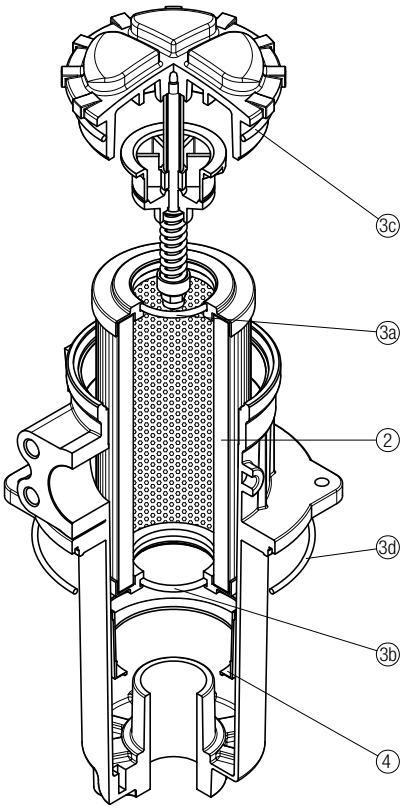

Item:	Q.ty: 1 pc. 2	Q.ty: 1 pc. 3 (3a ÷ 3d)		Q.ty: 1 pc. 4
Filter series	Filter element	Seal Kit code number NBR	FPM	Contamination retainer binder
FRI 255	See order table	02050013	02050014	01060301

FRI 850

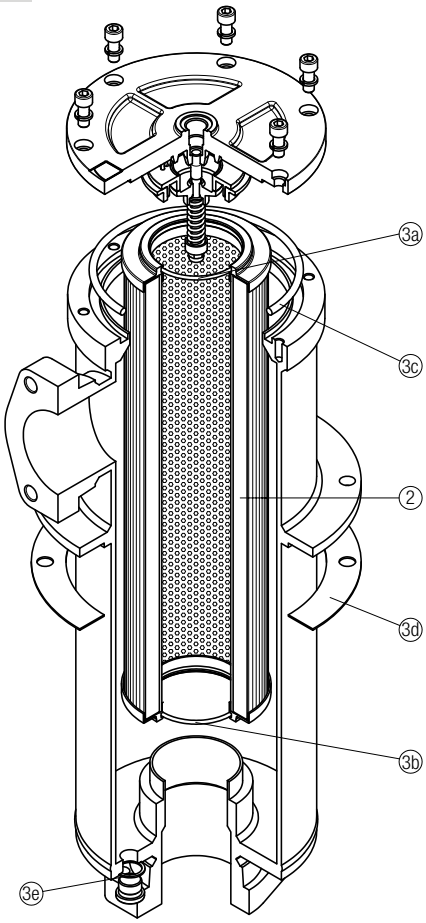

Item:	Q.ty: 1 pc. 2	Q.ty: 1 pc. 3 (3a ÷ 3e)	
Filter series	Filter element	Seal Kit code number NBR	FPM
FRI 850	See order table	02050218	02050225