HYDRAULIC FILTRATION
PRODUCTS

LOW & MEDIUM PRESSURE FILTERS

PASSION TO PERFORM

MPFILTRI®

A WORLDWIDE LEADER IN THE FIELD OF HYDRAULIC FILTRATION EQUIPMENT.

Our company started life in 1964, when Bruno Pasotto decided to attempt to cater for the requests of a market still to be fully explored, with the study, design, development, production and marketing of a vast range of filters for hydraulic equipment, capable of satisfying the needs of manufacturers in all sectors. The quality of our products, our extreme competitiveness compared with major international producers and our constant activities of research, design and development has made us a worldwide leader in the field of hydraulic circuit filtering.
Present for over 50 years in the market, we have played a truly decisive role in defining our sector, and by now we are a group capable of controlling our entire chain of production, monitoring all manufacturing processes to guarantee superior quality standards and to provide concrete solutions for the rapidly evolving needs of customers and the market.

MARKET **LEADER**

Our work is based on a skillful interaction between advanced technology and fine workmanship, **customizing products according to specific market requests**, focusing strongly on innovation and quality, and following every step in the manufacturing of both standard and special products, fully respecting customer expectations.

Our customer-oriented philosophy, which enables us to satisfy all customer requests **rapidly** and **with personalized products**, makes us a **dynamic and flexible enterprise**. The possibility of constantly controlling and monitoring the entire production process is essential to allow us to guarantee the quality of our products.

WORLDWIDE PRESENCE

Our foreign Branches enable us to offer a diversified range of products that allow us to successfully face the aggressive challenge of international competition, and also to maintain a stable presence at a local level.

The Group boasts **8** **business branches**

TECHNOLOGY

Our constant **quest for excellence in quality and technological innovation** allows us to offer only the best solutions and services for applications in many fields, including general industry, test rigs, lubrication, heavy engineering, renewable energies, naval engineering, offshore engineering, aviation systems, emerging technologies and mobile plant (i.e. tractors, excavators, concrete pumps, platforms).

AND PRODUCTION

Our high level of technological expertise means **we can rely entirely on our own resources, without resorting to external providers.** This in turn enables us to satisfy a growing number of customer requests, also exploiting our constantly updated range of machines and equipment, featuring **fully-automated workstations** capable of **24-hour production**.

SUCTION FILTERS

Flow rates
up to 875 l/min

Mounting:
- Tank immersed
- In-Line
- In tank with shut off valve
- In tank with flooded suction

RETURN FILTERS

Flow rates
up to 3000 l/min

Pressure
up to 20 bar

Mounting:
- In-Line
- Tank top
- In single and duplex designs

RETURN / SUCTION FILTERS

Flow rates
up to 300 l/min

Pressure
up to 80 bar

Mounting:
- In-Line
- Tank top

SPIN-ON FILTERS

Flow rates
up to 365 l/min

Pressure
up to 35 bar

Mounting:
- In-Line
- Tank top

LOW & MEDIUM PRESSURE FILTERS

Flow rates
up to 3000 l/min

Pressure
up to 80 bar

Mounting:
- In-Line
- Parallel manifold version
- In single and duplex designs

HIGH PRESSURE FILTERS

Flow rates
up to 750 l/min

Pressure from 110 bar
up to 560 bar

Mounting:
- In-Line
- Manifold
- In single and duplex designs

PRODUCT RANGE

MP Filtri can offer a vast and articulated range of products for the global market, suitable for all industrial sectors using hydraulic equipment.

This includes filters (suction, return, return/suction, spin-on, pressure, stainless steel pressure) and structural components (motor/pump bell-housings, transmission couplings, damping rings, foot brackets, aluminium tanks, cleaning covers).

We can provide all the skills and solutions required by the modern hydraulics industry to monitor contamination levels and other fluid conditions.

Mobile filtration units and a full range of accessories allow us to supply everything necessary for a complete service in the hydraulic circuits.

STAINLESS STEEL HIGH PRESSURE FILTERS

Flow rates
up to 125 l/min

Pressure from 320 bar
up to 1000 bar

Mounting:
- In-Line
- Manifold
- In single
  and duplex designs

CONTAMINATION MONITORING PRODUCTS

- Online, in-line particle counters
- Off-line bottle sampling products
- Fully calibrated using relevant ISO standards
- A wide range of variants to support fluid types and communication protocols

MOBILE FILTRATION UNITS

Flow rates from 15 l/min
up to 200 l/min

POWER TRANSMISSION PRODUCTS

- Aluminium bell-housings for motors from 0.12 kW to 400 kW
- Couplings in Aluminium Cast Iron - Steel
- Damping rings
- Foot bracket
- Aluminium tanks
- Cleaning covers

TANK ACCESSORIES

- Oil filler and air breather plugs
- Optical and electrical level gauges
- Pressure gauge valve selectors
- Pipe fixing brackets
- Pressure gauges

HYDRAULIC FILTRATION PRODUCTS

1 page	INTRODUCTION
1	COMPANY
6	PRODUCT RANGE
11	CONTAMINATION MANAGEMENT
22	FILTER SIZING
24	CORRECTIVE FACTOR

28 page	SUCTION FILTERS		up to Q_{max} l/min	up to Q_{max} gpm
31	STR & MPA - MPM	Submerged suction filter, with bypass or magnetic filter	1000	264
39	SF2 250 - 350	Semi-submerged positive head suction filter, low flow rate	160	42
47	SF2 500	Semi-submerged positive head suction filter, high flow rate	700	185
57	CLOGGING INDICATORS			

60 page	RETURN FILTERS		up to P_{max} bar	up to P_{max} psi	up to Q_{max} l/min	up to Q_{max} gpm
63	MPFX	Tank top semi-immersed filter, standard filter element disassembly	8	116	900	238
91	MPLX	Tank top semi-immersed filter, standard filter element disassembly	10	145	1800	476
99	MPTX	Tank top semi-immersed filter, easy filter element disassembly	8	116	300	79
117	MFBX	Bowl assembly	8	116	700	185
125	MPF	Tank top semi-immersed filter, standard filter element disassembly	8	116	900	238
153	MPT	Tank top semi-immersed filter, easy filter element disassembly	8	116	300	79
171	MFB	Bowl assembly	8	116	700	185
179	MPH	Tank top semi-immersed filter, standard filter element disassembly	10	145	3500	925
203	MPI	Tank top semi-immersed filter, standard filter element disassembly	10	145	3500	925
215	FRI	Tank top semi-immersed filter, easy filter element disassembly, it can be used also as in-line filter	20	290	2500	660
231	RF2	Semi-immersed under-head filter, easy filter element disassembly	20	290	615	162
238	CLOGGING INDICATORS					
248	ACCESSORIES					

250 page	RETURN / SUCTION FILTERS		up to P_{max} bar	up to P_{max} psi	up to Q_{max} l/min	up to Q_{max} gpm
253	MRSX	Unique TANK TOP filter for mobile machinery, with combined filtration on return and suction to the inlet at the hydrostatic transmissions in closed circuit	10	145	250	66
265	LMP 124 MULTIPORT	Unique IN-LINE filter for mobile machinery, with combined filtration on return and suction to the inlet at the hydrostatic transmissions in closed circuit	80	1160	120	32
273	CLOGGING INDICATORS					

286 page	SPIN-ON FILTERS		up to P_{max} bar	up to P_{max} psi	up to Q_{max} l/min	up to Q_{max} gpm
289	MPS	Low pressure filter, available with single cartridge (CS) for in-line or flange mounting or with two cartridge on the same axis on the opposite sides	12	174	365	96
305	MSH	In-line low and medium pressure filter available with single cartridge (CH)	35	508	195	52
311	CLOGGING INDICATORS					

INDEX

322 page		LOW & MEDIUM PRESSURE FILTERS	up to P_{max} bar	psi	up to Q_{max} l/min	gpm
325	LMP 110 - 120 - 123 MULTIPORT	In-line filter with Multiport design for multiple choice connection	80	1160	175	46
341	LMP 210 - 211	In-line low & medium pressure filter, low flow rate	60	870	365	96
351	LMP 400 - 401 & 430 - 431	In-line low & medium pressure filter, high flow rate	60	870	780	206
363	LMP 950 - 951	In-line filter, available with 2 and up to 6 different heads	30	435	2400	634
371	LMP 952 - 953 - 954	In-line low pressure filter specifically designed to be mounted in series	25	363	4500	1189
383	LMD 211	In-line duplex medium pressure filter	60	870	200	53
391	LMD 400 - 401 & 431	In-line duplex low pressure filter	16	232	600	159
407	LMD 951	In-line duplex filter, available with 2 up to 6 different heads	16	232	1200	317
415		Filter elements designed according to DIN 24550				
417	LDP - LDD	In-line and duplex medium pressure filter	60	870	360	95
427	LMP 900 - 901	In-line low pressure filter	30	435	2000	528
435	LMP 902 - 903	In-line filter specifically designed to be mounted in series	20	290	3000	793
444	CLOGGING INDICATORS					
450	ACCESSORIES					

452 page		HIGH PRESSURE FILTERS	up to P_{max} bar	psi	up to Q_{max} l/min	gpm
455	FMP 039	Filter high pressure, low flow rate applications	110	1595	80	21
463	FMP	Filter high pressure, high flow rate applications	320	4641	500	132
475	FHP	Typical high pressure filter for mobile applications, high flow rate	420	6092	630	166
493	FMM	Typical high pressure filter for mobile applications, low flow rate	420	6092	300	79
503	FHA 051	Filter optimized for use in high pressure operating systems, low flow rate	560	8122	150	40
511	FHM	High pressure filter with intermediate manifold construction	320	4641	400	106
529	FHB	High pressure for block mounting	320	4641	485	128
543	FHF 325	In-line manifold top mounting	350	5076	550	145
553	FHD	In-line duplex high pressure filter	350	5076	250	66
567	HPB	Pressure filter kits for integration in control manifolds	420	6092	300	79
576	CLOGGING INDICATORS					

584 page		STAINLESS STEEL HIGH PRESSURE FILTERS	up to P_{max} bar	psi	up to Q_{max} l/min	gpm
587	FZP	In-line pressure filter with threaded mount	420	6092	160	42
597	FZH	In-line pressure filter with threaded mount for higher pressure	700	10153	80	21
607	FZX	In-line pressure filter with threaded mount up to 1000 bar	1000	14504	10	3
615	FZM	Manifold top mounting	320	4641	70	18
623	FZB	Manifold side mounting	320	4641	70	18
631	FZD	Duplex pressure filter for continuous operation requirements	350	5076	60	16
641	CLOGGING INDICATORS					

646 page		CLOGGING INDICATORS
649	QUICK REFERENCE GUIDE	

THE CORRECT FILTER SIZING HAVE TO BE BASED ON THE TOTAL PRESSURE DROP DEPENDING BY THE APPLICATION.
FOR EXAMPLE, THE MAXIMUM TOTAL PRESSURE DROP ALLOWED BY A NEW AND CLEAN RETURN FILTER HAVE TO BE IN THE RANGE 0.4 - 0.6 bar / 5.80 - 8.70 psi.

The pressure drop calculation is performed by adding together the value of the housing with the value of the filter element. The pressure drop Δpc of the housing is proportional to the fluid density (kg/dm³ / lb/ft³).
The filter element pressure drop Δpe is proportional to its viscosity (mm²/s / SUS), the corrective factor Y have to be used in case of an oil viscosity different than 30 mm²/s (cSt) / 150 SUS.

Sizing data for single filter element, head at top

Δpc = Filter housing pressure drop [bar / psi]
Δpe = Filter element pressure drop [bar / psi]
Y = Corrective factor Y (see correspondent table), depending on the filter type, on the filter element size, on the filter element length and on the filter media
Q = flow rate (l/min - gpm)
V1 reference oil viscosity = 30 mm²/s (cSt) /150 SUS
V2 = operating oil viscosity in mm²/s (cSt) / SUS

Filter element pressure drop calculation with an oil viscosity different than 30 mm²/s (cSt) / 150 SUS

International system:
Δpe = Y : 1000 x Q x (V2:V1)

Imperial system:
Δpe = Y : 17.2 x Q x (V2:V1)

Δp Tot. = Δpc + Δpe

Verification formula

Δp Tot. ≤ Δp max allowed

Maximum total pressure drop (Δp max) allowed by a new and clean filter

Application	Range:[bar]	[psi]	
Suction filters	0.08 - 0.10 bar	1.16 - 1.45 psi	
Return filters	0.4 - 0.6 bar	5.80 - 8.70 psi	
Return - Suction filters (*)	0.8 - 1.0 bar	11.60 - 14.50 psi	
Low & Medium Pressure filters	0.4 - 0.6 bar	5.80 - 8.70 psi	return lines
	0.3 - 0.5 bar	4.35 - 7.25 psi	lubrication lines
	0.3 - 0.4 bar	4.35 - 5.80 psi	off-line in power systems
	0.1 - 0.3 bar	1.45 - 4.35 psi	off-line in test benches
	0.4 - 0.6 bar	5.80 - 8.7 psi	over-boost
High Pressure filters	0.8 - 1.5 bar	11.60 - 21.75 psi	
Stainless Steel filters	0.8 - 1.5 bar	11.60 - 21.75 psi	

(*) The suction flow rate should not exceed 30% of the return flow rate

Generic filter calculation example

Application data:
Tank top return filter
Pressure Pmax = 10 bar
Flow rate Q = 120 l/min
Viscosity V2 = 46 mm²/s (cSt)
Oil density = 0.86 kg/dm³
Required filtration efficiency = 25 µm with absolute filtration
With bypass valve and G 1 1/4" inlet connection

Calculation:
Δpc = 0.03 bar / 0.43 psi (see graphic below)

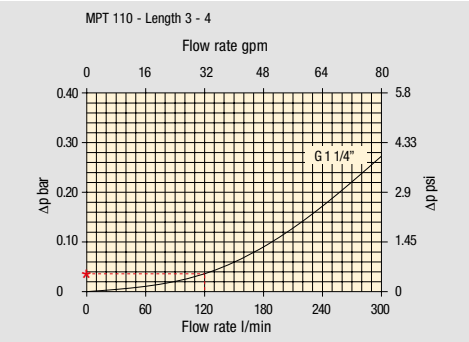

Filter housings Δp pressure drop.
The curves are plotted using mineral oil with density of 0.86 kg/dm³ in compliance with ISO 3968.
Δp varies proportionally with density.

Δpe = (2.00 : 1000) x 120 x (46 : 30) = 0.37 bar
Δpe = (2.00 : 17.2) x 32 x (216 : 150) = 5.36 psi

Filter element		Absolute filtration H Series					Nominal filtration N Series		
Type		A03	A06	A10	A16	A25	P10	P25	M25 M60 M90
Return filters		74.00	50.08	20.00	16.00	9.00	6.43	5.51	4.40
MF 020	2	29.20	24.12	8.00	7.22	5.00	3.33	2.85	2.00
	3	22.00	19.00	6.56	5.33	4.33	1.68	1.44	1.30
MF 030 MFX 030	1	74.00	50.08	20.00	16.00	9.00	6.43	5.51	3.40
MF 100 MFX 100	1	28.20	24.40	8.67	8.17	6.88	4.62	3.96	1.25
	2	17.33	12.50	6.86	5.70	4.00	3.05	2.47	1.10
	3	10.25	9.00	3.65	3.33	2.50	1.63	1.32	0.96
	4	6.10	5.40	2.30	2.20	2.00	1.19	0.96	0.82

Δp Tot. = 0.03 + 0.37 = 0.4 bar
Δp Tot. = 0.43 + 5.36 = 5.79 psi

The selection is correct because the total pressure drop value is inside the admissible range for top tank return filters.
In case the allowed max total pressure drop is not verified, it is necessary to repeat the calculation changing the filter length/size.

Corrective factor

Corrective factor Y to be used for the filter element pressure drop calculation. The values depend to the filter size and length and to the filter media.
Reference oil viscosity 30 mm^2/s

Low & Medium pressure filters

Filter element		Absolute filtration N-W Series					Nominal filtration N Series		
Type		A03	A06	A10	A16	A25	P10	P25	M25
CU 110	1	16.25	15.16	8.75	8.14	5.87	2.86	2.65	0.14
	2	12.62	10.44	6.11	6.02	4.15	1.60	1.49	0.12
	3	8.57	7.95	5.07	4.07	2.40	1.24	1.15	0.11
	4	5.76	4.05	2.80	2.36	1.14	0.91	0.85	0.05
CU 210	1	5.30	4.80	2.00	1.66	1.32	0.56	0.43	0.12
	2	3.44	2.95	1.24	1.09	0.70	0.42	0.35	0.09
	3	2.40	1.70	0.94	0.84	0.54	0.33	0.23	0.05
DN	016	7.95	7.20	3.00	2.49	1.98	0.84	0.65	0.18
	025	5.00	4.53	1.89	1.57	1.25	0.53	0.41	0.11
	040	3.13	2.66	1.12	0.98	0.63	0.38	0.32	0.08
CU 400	2	3.13	2.55	1.46	1.22	0.78	0.75	0.64	0.19
	3	2.15	1.70	0.94	0.78	0.50	0.40	0.34	0.10
	4	1.60	1.28	0.71	0.61	0.40	0.34	0.27	0.08
	5	1.00	0.83	0.47	0.34	0.20	0.24	0.19	0.06
	6	0.82	0.58	0.30	0.27	0.17	0.22	0.18	0.05
CU 900	1	0.86	0.63	0.32	0.30	0.21	-	-	0.05
CU 950	2	1.03	0.80	0.59	0.40	0.26	-	-	0.05
	3	0.44	0.40	0.27	0.18	0.15	-	-	0.02
MR 630	7	0.88	0.78	0.36	0.34	0.16	0.12	0.96	0.47

TYPICAL FILTER SIZING Selection Software

Step 1

Select “FILTER SIZING SOFTWARE” after login

OR

Select “FILTER SIZING” after login from a product page

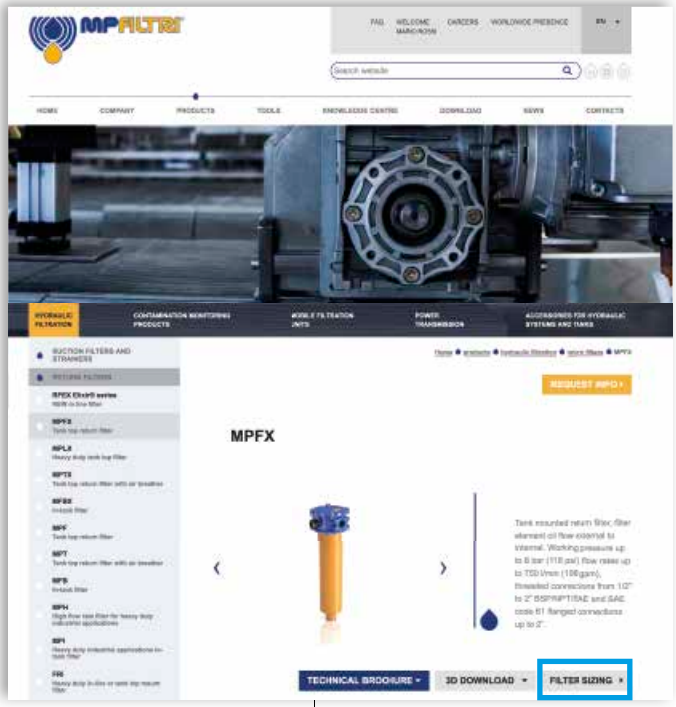

Step 2

Choose the type of filter family.
Enter the main data for sizing the filter
then push CALCULATE.

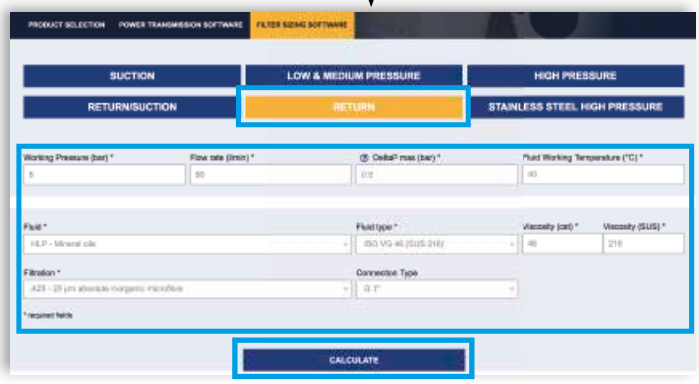

Enter the main data for sizing the filter
then push CALCULATE.

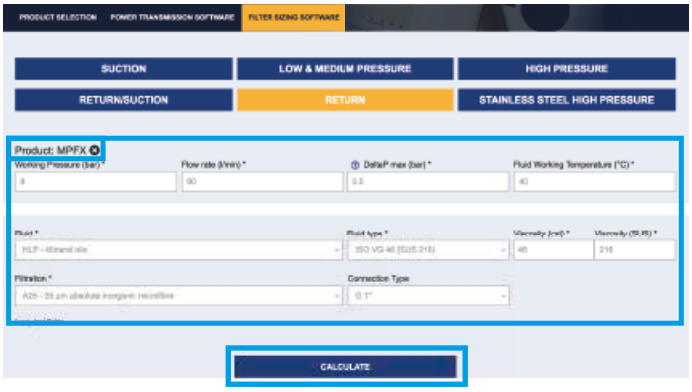

Step 3

Select the desidered options to choose the appropriate filter type for the application.

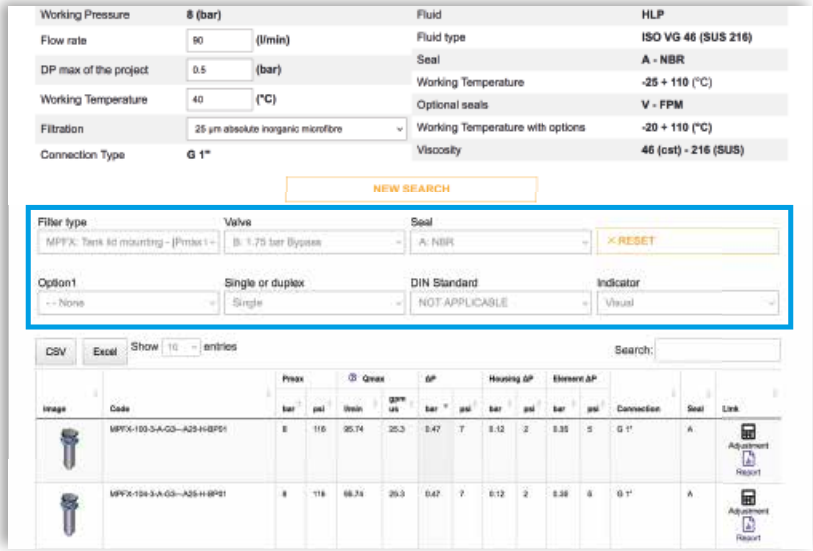

Step 4

Choose the most suitable filter from the proposed list.

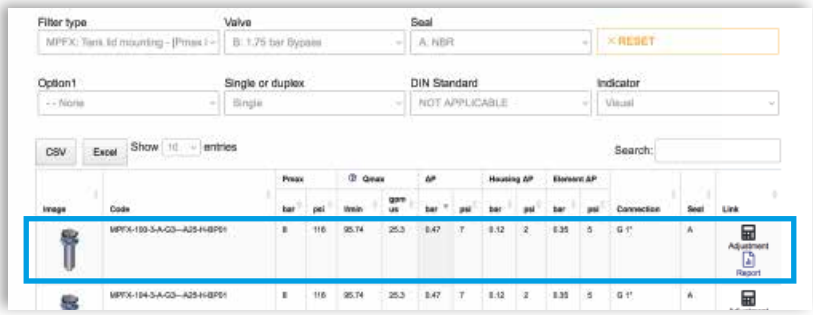

Step 5

A SAVE YOUR FILTER'S REPORT

B MANUAL EDIT

It is possible to change the filter modifying every parameter.

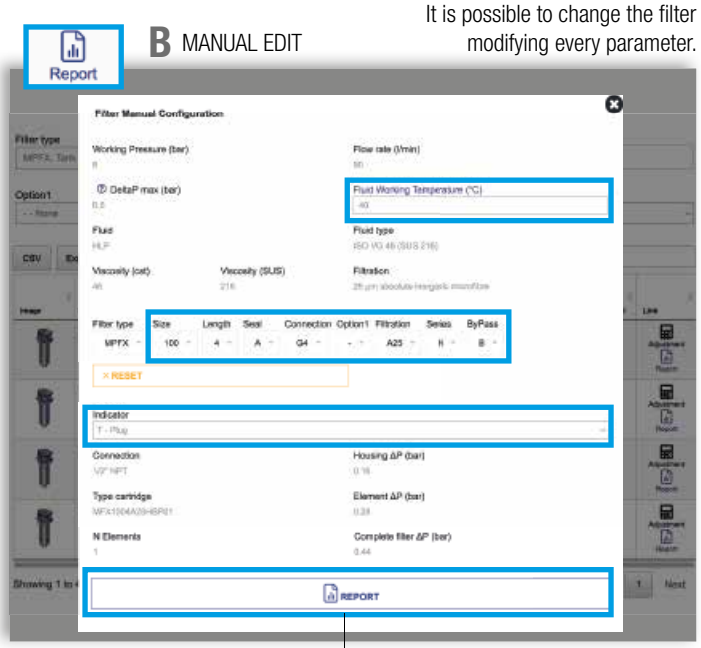

SAVE IN YOUR ARCHIVE
typing your reference data and then SAVE AS PDF

A new browser window displays the pdf

see **A**

Close the report window

By clicking your WELCOME button, the SHOW REPORTS is displayed: select it to see your filters list.

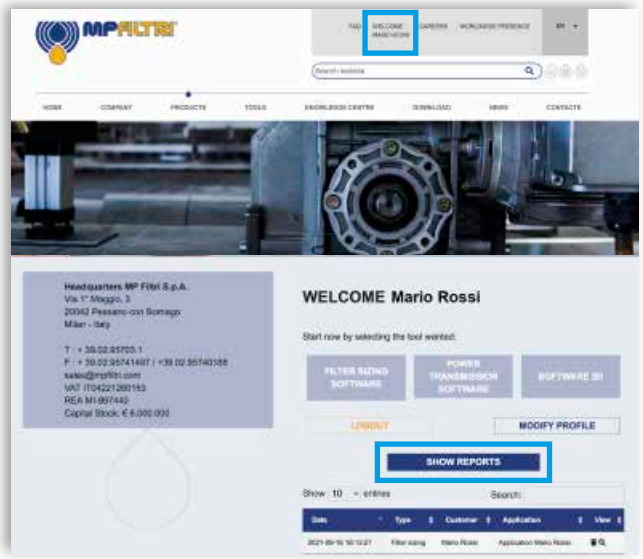

LMP - low and medium pressure filters are used as process filters to protect pumps, pressure reducers and hydraulic circuits from damage due to oil contamination as per ISO 4406.

LMP series is available in 5 different sizes: 100, 200, 400, 900 and 950 and a wide range of versions.

LMP filters are available with several working pressures suitable for all hydraulic circuits as:

- **return filters in external tank mounting construction for medium and high flow rates in single and duplex versions**
- **in-line filters for low and medium pressures for off-line applications**
- **in-line process filters for medium pressures, for example, for forced lubrication applications, in single or duplex versions**
- **in-line filters for medium pressures for filtering hydraulic boost circuits**
- **in-line filters as high holding capacity filters on test beds**

LMP filters are thus specifically designed to be suitable for a wide range of application: from steel plants to mobile equipments, from test benches to naval application, providing the right solution for filtering requirements in all sectors.

LMP filters are available in single, manifold and duplex versions (LMD series).

FILTER SIZING

For the proper corrective factor Y see chapter at page 24

Low & Medium Pressure filters

LMP 110 - 120 - 123 MULTIPORT	page 325
LMP 210 - 211	341
LMP 400 - 401 & 430 - 431	351
LMP 950 - 951	363
LMP 952 - 953 - 954	371
LMD 211	383
LMD 400 - 401 & 431	391
LMD 951	407

Filter element according to DIN 24550	page 415
LDP - LDD	417
LMP 900 - 901	427
LMP 902 - 903	435

INDICATORS	page 444
ACCESSORIES	page 450

LMP 110-120-123 series
MULTIPORT

Maximum working pressure up to 8 MPa (80 bar) - Flow rate up to 175 l/min

Description

Low & Medium Pressure filters

Maximum working pressure up to 8 MPa (80 bar)
Flow rate up to 175 l/min

LMP110 is a range of versatile low pressure filter for transmission, protection of sensitive components in low pressure hydraulic systems and filtration of the coolant into the machine tools.
They are directly connected to the lines of the system through the hydraulic fittings.

Available features:
- Female threaded connections up to 1", for a maximum return flow rate of 175 l/min
- Fine filtration rating, to get a good cleanliness level into the system
- Bypass valve, to relieve excessive pressure drop across the filter media
- Visual, electrical and electronic differential clogging indicators
- Multiport and multifunction schemes, to meet any type of application.
- LMP112: 3/4" additional input port
- LMP116: 3/4" additional output port
- LMP118: 3/4" bypass port, to send the bypass flow to the reservoir instead of the system
- LMP119: 3/4" relief port, to relief the input pressure in the filter, protecting the components downstream the filter against back pressure caused by the pressure drop (cold starts)
- LMP120: connections placed in the same side
- LMP122: connections placed in the same side and 1" additional output port
- LMP123: 2 and 3 bar integrated relief valve

Common applications:
Delivery lines, in any low pressure industrial equipment or mobile machines

Technical data

Filter housing materials
- Head: Aluminium
- Housing: Cataphoresis - Painted Steel
- Bypass valve: Brass - Aluminium

Pressure
- Test pressure: 12 MPa (120 bar)
- Burst pressure:
  LMP 110: 29 MPa (290 bar)
  LMP 120/130: 38 MPa (380 bar)
- Pulse pressure fatigue test: 1 000 000 cycles with pressure from 0 to 8 MPa (80 bar)

Bypass valve
- Opening pressure 350 kPa (3.5 bar) ±10%
- Other opening pressures on request.

Δp element type
- Microfibre filter elements - series N - W: 20 bar
- Wire mesh filter elements - series N: 20 bar
- Fluid flow through the filter element from OUT to IN

Seals
- Standard NBR series A
- Optional FPM series V

Temperature
From -25 °C to +110 °C

Note
LMP MULTIPORT filters are provided for vertical mounting

Weights [kg] and volumes [dm³]

Filter series	Weights [kg]				Volumes [dm³]			
	Length 1	2	3	4	Length 1	2	3	4
LMP 110-112-116-118-119	1.60	1.80	2.10	2.60	0.75	0.81	1.11	1.53
LMP 120-122	1.90	2.10	2.40	2.90	0.75	0.81	1.11	1.53
LMP 123	1.70	1.90	2.20	2.70	0.75	0.81	1.11	1.53

FILTER ASSEMBLY SIZING
Flow rates [l/min]

		Filter element design - N Series							
Filter series	Length	A03	A06	A10	A16	A25	M25 M60 M90	P10	P25
LMP 110	1	40	42	65	69	85	163	117	120
	2	49	57	83	83	101	163	136	138
	3	66	70	92	102	124	164	142	144
	4	86	102	118	124	144	165	148	149
LMP 112	1	36	38	55	57	67	105	84	86
	2	44	49	66	66	76	105	93	94
	3	56	58	71	77	87	106	96	97
	4	67	77	85	88	97	106	99	99
LMP 116	1	36	38	54	56	64	96	79	80
	2	43	49	63	64	72	96	86	87
	3	54	57	68	73	82	96	88	89
	4	65	73	79	82	89	96	91	91
LMP 118	1	40	42	65	69	85	163	117	120
	2	49	57	83	83	101	163	136	138
	3	66	70	92	102	124	164	142	144
	4	86	102	118	124	144	165	148	149
LMP 120	1	40	43	66	70	87	172	121	125
	2	50	58	85	85	104	172	142	144
	3	67	71	94	105	129	173	149	151
	4	88	106	122	129	151	174	155	157
LMP 122	1	39	42	64	67	81	146	109	111
	2	49	56	80	80	96	146	124	126
	3	65	68	88	96	114	146	129	130
	4	82	97	110	115	131	147	134	135

Maximum flow rate for a complete low and medium pressure filter with a pressure drop Δp = 0.7 bar.
The reference fluid has a kinematic viscosity of 30 mm^2/s (cSt) and a density of 0.86 kg/dm^3.
For different pressure drop or fluid viscosity we recommend to use our selection software available on www.mpfiltri.com.
You can also calculate the right size using the formulas present on the FILTER SIZING paragraph at the beginning of the full catalogue or at the beginning of the filter family brochure.
Please, contact our Sales Department for further additional information.

		Filter element design - N Series							
Filter series	Length	A03	A06	A10	A16	A25	M25 M60 M90	P10	P25
LMP 123	1	35	37	50	52	59	83	70	71
	2	41	46	58	58	65	83	76	76
	3	51	53	62	65	72	83	77	78
	4	59	65	70	72	78	83	79	79

Maximum flow rate for a complete low and medium pressure filter with a pressure drop Δp = 2.7 bar.
The reference fluid has a kinematic viscosity of 30 mm^2/s (cSt) and a density of 0.86 kg/dm^3.
For different pressure drop or fluid viscosity we recommend to use our selection software available on www.mpfiltri.com.
You can also calculate the right size using the formulas present on the FILTER SIZING paragraph at the beginning of the full catalogue or at the beginning of the filter family brochure.
Please, contact our Sales Department for further additional information.

Pressure drop

Filter housings Δp pressure drop

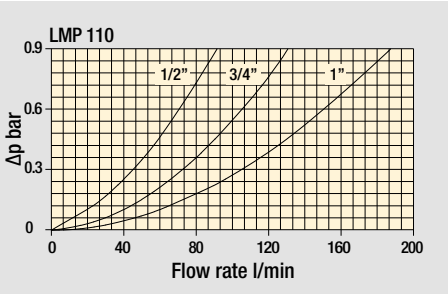

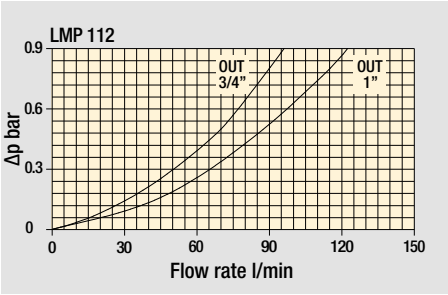

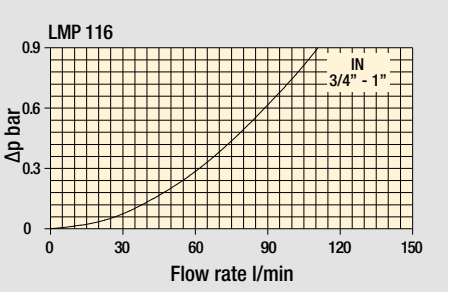

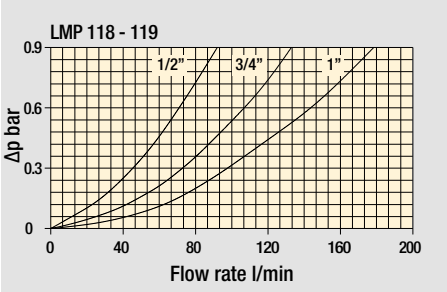

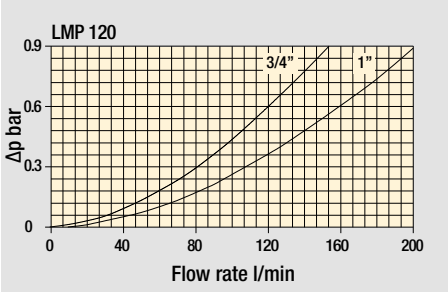

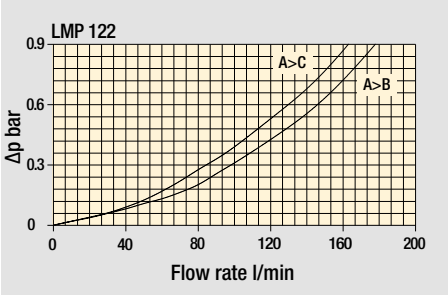

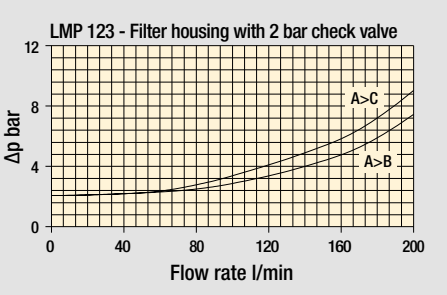

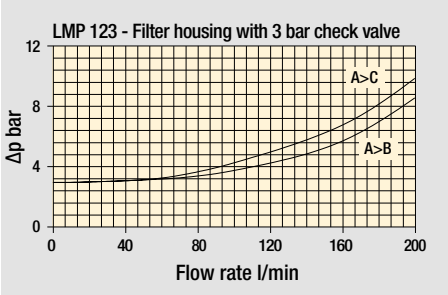

Bypass valve pressure drop

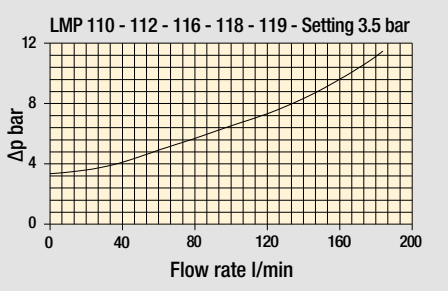

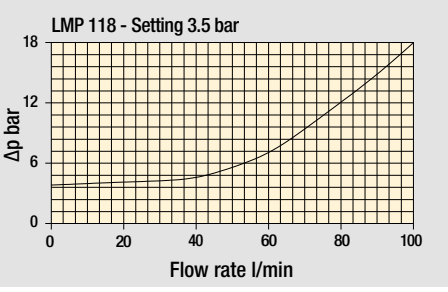

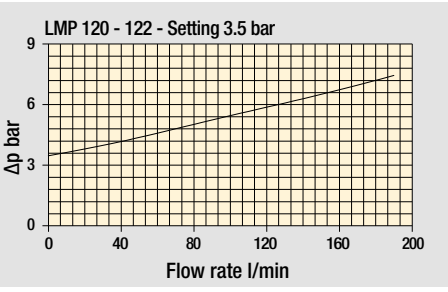

The curves are plotted using mineral oil with density of 0.86 kg/dm^3 in compliance with ISO 3968. Δp varies proportionally with density.

Hydraulic symbols - Multiport styles

LMP 110 — In-Line filter

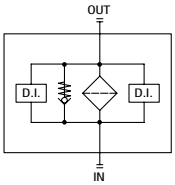

LMP 120 — Port IN-OUT on the same side

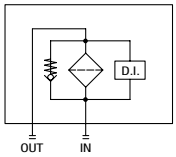

LMP 112 — Double IN port

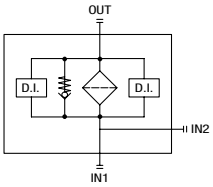

LMP 122 — Lateral OUT port high flow

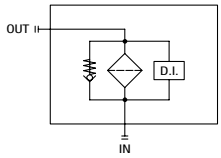

LMP 116 — Double OUT port

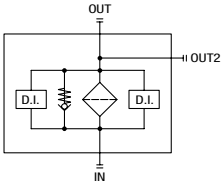

LMP 123 — Bypass valve for heat exchanger high flow

Type 1

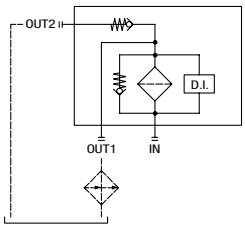

LMP 118 — Bypass lateral

Always cleaning fluid in OUT port

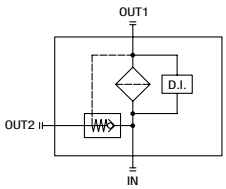

Type 2

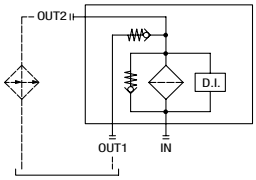

LMP 119 — Safety valve 6 bar for heat exchanger

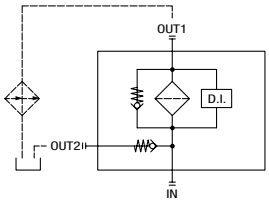

Designation & Ordering code

COMPLETE FILTER

Configuration example: LMP112 | 4 | B | A | D | 1 | A10 | N | P01

Series and size

LMP110 | LMP112 | LMP116

Length

1 | 2 | 3 | 4 |

Bypass valve

S	Without bypass	**B**	3.5 bar

Seals and treatments

		Filtration rating Axx	Mxx	Pxx
A	NBR	•	•	•
V	FPM	•	•	•
W	NBR compatible with fluids HFA-HFB-HFC	•	•	

Connections

		Aux (only LMP 112 - 116)
A	G 3/4"	G 3/4"
B	G 1"	G 3/4"
C	3/4" NPT	3/4" NPT
D	1" NPT	3/4" NPT
E	SAE 12 - 1 1/16" - 12 UN	SAE 12 - 1 1/16" - 12 UN
F	SAE 16 - 1 5/16" - 12 UN	SAE 12 - 1 1/16" - 12 UN

Connection for differential indicator

1	Without
2	With standard connection
3	With connection on the opposite side
6	With two connections on both sides

Filtration rating (filter media)

A03	Inorganic microfiber 3 µm	**M25**	Wire mesh 25 µm
A06	Inorganic microfiber 6 µm	**M60**	Wire mesh 60 µm
A10	Inorganic microfiber 10 µm	**M90**	Wire mesh 90 µm
A16	Inorganic microfiber 16 µm	**P10**	Resin impregnated paper 10 µm
A25	Inorganic microfiber 25 µm	**P25**	Resin impregnated paper 25 µm

Element Δp

N	20 bar

Execution

P01	MP Filtri standard
Pxx	Customized

FILTER ELEMENT

Configuration example: CU110 | 4 | A10 | A | N | P01

Element series and size

CU110

Element length

1 | 2 | 3 | 4 |

Filtration rating (filter media)

A03	Inorganic microfiber 3 µm	**M25**	Wire mesh 25 µm
A06	Inorganic microfiber 6 µm	**M60**	Wire mesh 60 µm
A10	Inorganic microfiber 10 µm	**M90**	Wire mesh 90 µm
A16	Inorganic microfiber 16 µm	**P10**	Resin impregnated paper 10 µm
A25	Inorganic microfiber 25 µm	**P25**	Resin impregnated paper 25 µm

Seals

		Filtration rating Axx	Mxx	Pxx
A	NBR	•	•	•
V	FPM	•	•	•
W	NBR compatible with fluids HFA-HFB-HFC	•	•	

Element Δp

N	20 bar

Execution

P01	MP Filtri standard
Pxx	Customized

ACCESSORIES

Differential indicators

		page
DEA	Electrical differential indicator	445
DEM	Electrical differential indicator	445-446
DLA	Electrical / visual differential indicator	446-447
DLE	Electrical / visual differential indicator	447
DTA	Electronic differential indicator	448
DVA	Visual differential indicator	448
DVM	Visual differential indicator	448

Additional features

		page
T2	Plug	449

Dimensions

LMP110 - LMP112 LMP116	
Filter length	**H [mm]**
1	182
2	215
3	265
4	365

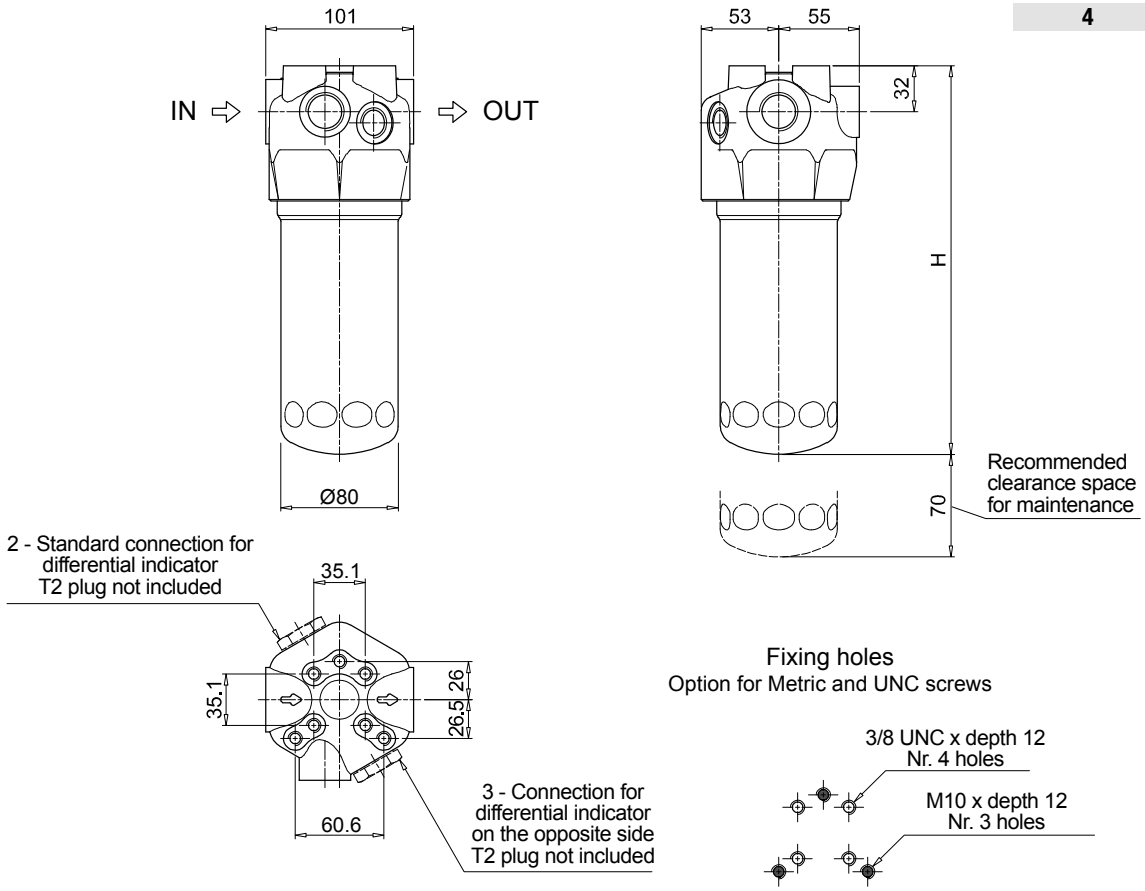

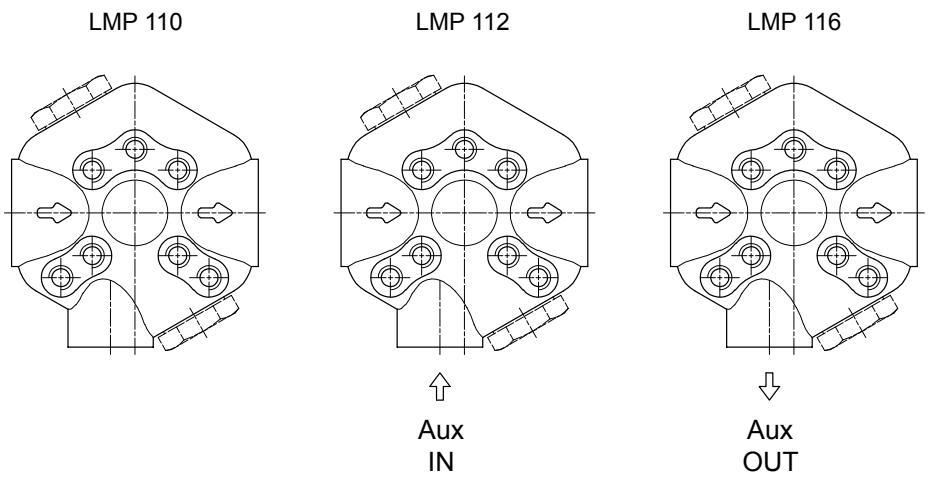

Designation & Ordering code

COMPLETE FILTER

Configuration example: LMP118 | 4 | B | A | D | 1 | A10 | N | P01

Series and size

LMP118 | **LMP119**

Length

1 | **2** | **3** | **4**

Bypass valve

B 3.5 bar

Seals and treatments

		Filtration rating Axx	Mxx	Pxx
A	NBR	•	•	•
V	FPM	•	•	•
W	NBR compatible with fluids HFA-HFB-HFC	•	•	

Connections

		Aux OUT
A	G 3/4”	G 3/4”
B	G 1”	G 3/4”
C	3/4” NPT	3/4” NPT
D	1” NPT	3/4” NPT
E	SAE 12 - 1 1/16” - 12 UN	SAE 12 - 1 1/16” - 12 UN
F	SAE 16 - 1 5/16” - 12 UN	SAE 12 - 1 1/16” - 12 UN

Connection for differential indicator

1 Without

2 With standard connection

Filtration rating (filter media)

A03	Inorganic microfiber 3 µm	**M25**	Wire mesh 25 µm
A06	Inorganic microfiber 6 µm	**M60**	Wire mesh 60 µm
A10	Inorganic microfiber 10 µm	**M90**	Wire mesh 90 µm
A16	Inorganic microfiber 16 µm	**P10**	Resin impregnated paper 10 µm
A25	Inorganic microfiber 25 µm	**P25**	Resin impregnated paper 25 µm

Element Δp

N 20 bar

Execution

P01 MP Filtri standard

Pxx Customized

FILTER ELEMENT

Configuration example: CU110 | 4 | A10 | A | N | P01

Element series and size

CU110

Element length

1 | **2** | **3** | **4**

Filtration rating (filter media)

A03	Inorganic microfiber 3 µm	**M25**	Wire mesh 25 µm
A06	Inorganic microfiber 6 µm	**M60**	Wire mesh 60 µm
A10	Inorganic microfiber 10 µm	**M90**	Wire mesh 90 µm
A16	Inorganic microfiber 16 µm	**P10**	Resin impregnated paper 10 µm
A25	Inorganic microfiber 25 µm	**P25**	Resin impregnated paper 25 µm

Seals

		Filtration rating Axx	Mxx	Pxx
A	NBR	•	•	•
V	FPM	•	•	•
W	NBR compatible with fluids HFA-HFB-HFC	•	•	

Element Δp

N 20 bar

Execution

P01 MP Filtri standard

Pxx Customized

ACCESSORIES

Differential indicators

		page
DEA	Electrical differential indicator	445
DEM	Electrical differential indicator	445-446
DLA	Electrical / visual differential indicator	446-447
DLE	Electrical / visual differential indicator	447
DTA	Electronic differential indicator	448
DVA	Visual differential indicator	448
DVM	Visual differential indicator	448

Additional features

		page
T2	Plug	449

Dimensions

LMP118 - LMP119	
Filter length	**H [mm]**
1	182
2	215
3	265
4	365

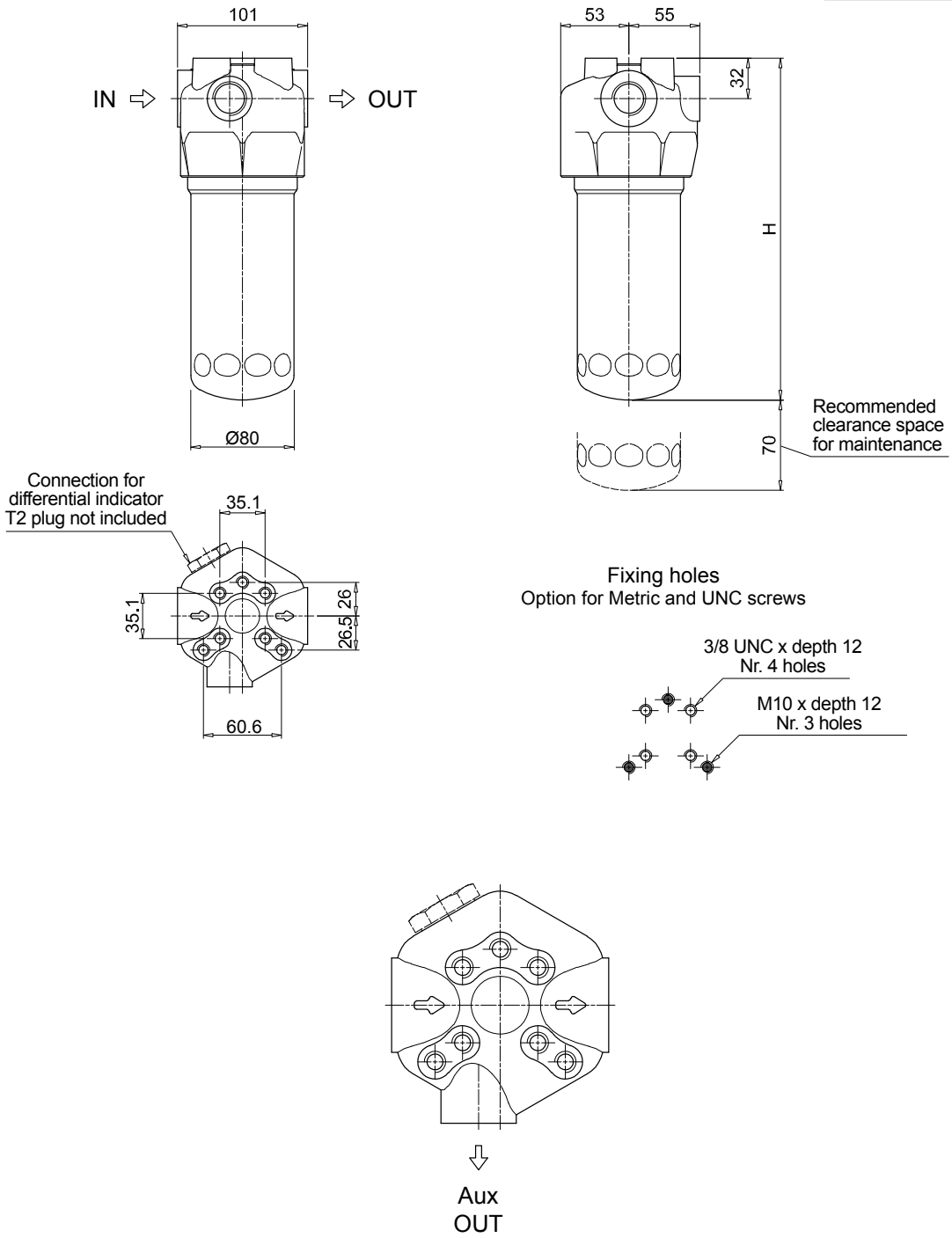

Designation & Ordering code

COMPLETE FILTER

Configuration example: LMP120 | 4 | B | A | D | 1 | A10 | N | P01

Series and size

LMP120 | **LMP122**

Length

1 | **2** | **3** | **4**

Bypass valve

S Without bypass
B 3.5 bar

Seals and treatments

		Filtration rating Axx	Mxx	Pxx
A	NBR	•	•	•
V	FPM	•	•	•
W	NBR compatible with fluids HFA-HFB-HFC	•	•	

Connections

		LMP120	LMP122
A	G 3/4"	•	
B	G 1"	•	•
C	3/4" NPT	•	
D	1" NPT	•	•
E	SAE 12 - 1 1/16" - 12 UN	•	
F	SAE 16 - 1 5/16" - 12 UN	•	•

Connection for differential indicator

1 Without
2 With standard connection

Filtration rating (filter media)

A03 Inorganic microfiber 3 µm
A06 Inorganic microfiber 6 µm
A10 Inorganic microfiber 10 µm
A16 Inorganic microfiber 16 µm
A25 Inorganic microfiber 25 µm
M25 Wire mesh 25 µm
M60 Wire mesh 60 µm
M90 Wire mesh 90 µm
P10 Resin impregnated paper 10 µm
P25 Resin impregnated paper 25 µm

Element Δp

N 20 bar

Execution

P01 MP Filtri standard
Pxx Customized

FILTER ELEMENT

Configuration example: CU110 | 4 | A10 | A | N | P01

Element series and size

CU110

Element length

1 | **2** | **3** | **4**

Filtration rating (filter media)

A03 Inorganic microfiber 3 µm
A06 Inorganic microfiber 6 µm
A10 Inorganic microfiber 10 µm
A16 Inorganic microfiber 16 µm
A25 Inorganic microfiber 25 µm
M25 Wire mesh 25 µm
M60 Wire mesh 60 µm
M90 Wire mesh 90 µm
P10 Resin impregnated paper 10 µm
P25 Resin impregnated paper 25 µm

Seals

		Filtration rating Axx	Mxx	Pxx
A	NBR	•	•	•
V	FPM	•	•	•
W	NBR compatible with fluids HFA-HFB-HFC	•	•	

Element Δp

N 20 bar

Execution

P01 MP Filtri standard
Pxx Customized

ACCESSORIES

Differential indicators

		page
DEA	Electrical differential indicator	445
DEM	Electrical differential indicator	445-446
DLA	Electrical / visual differential indicator	446-447
DLE	Electrical / visual differential indicator	447
DTA	Electronic differential indicator	448
DVA	Visual differential indicator	448
DVM	Visual differential indicator	448

Additional features

		page
T2	Plug	449

Dimensions

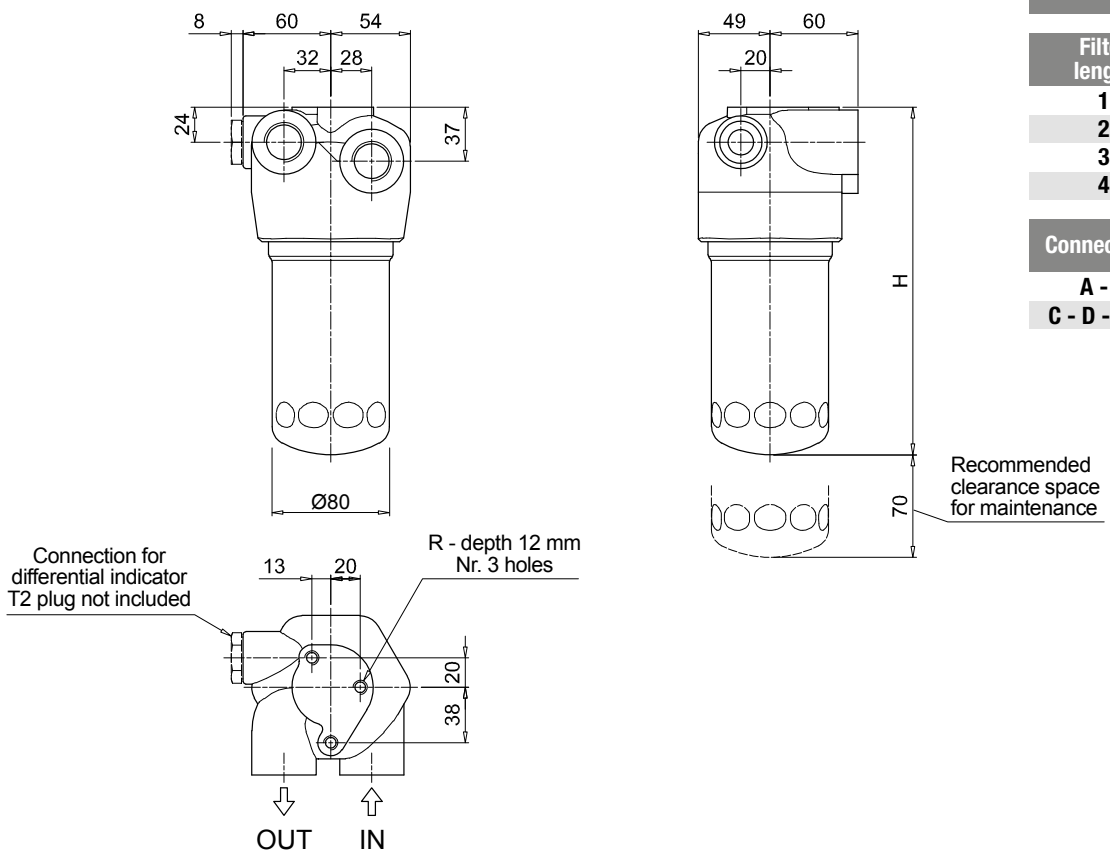

LMP120

Filter length	H [mm]
1	182
2	215
3	265
4	365

Connections	R
A - B	M10
C - D - E - F	3/8" UNC

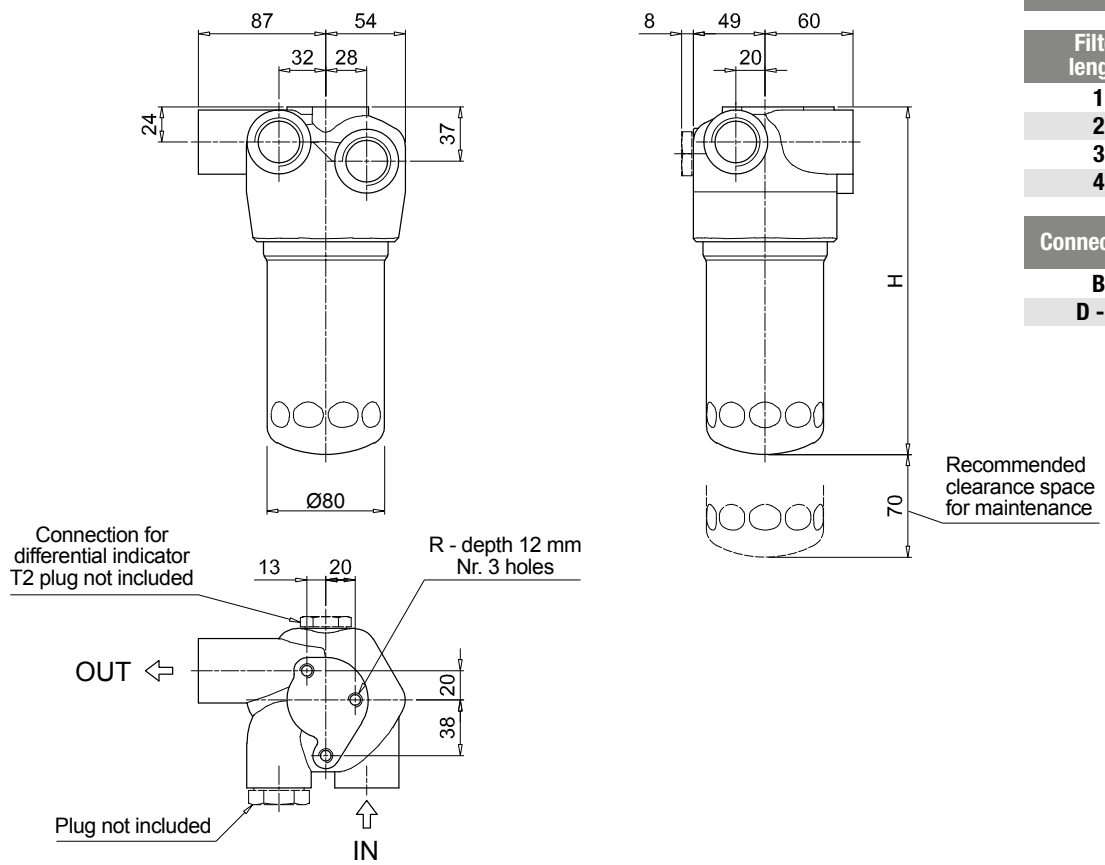

LMP122

Filter length	H [mm]
1	182
2	215
3	265
4	365

Connections	R
B	M10
D - F	3/8" UNC

Designation & Ordering code

COMPLETE FILTER

Configuration example: LMP123 | 4 | R | A | F | 1 | A10 | N | P01

Series and size

LMP123

Length

1 | 2 | 3 | 4 |

Valves	Bypass	OUT to cooler	Check valve
C	without	front	2 bar
D			3 bar
G		side	2 bar
H			3 bar
M	3.5 bar	front	2 bar
N			3 bar
Q		side	2 bar
R			3 bar

Seals and treatments

		Filtration rating Axx	Mxx	Pxx
A	NBR	•	•	•
V	FPM	•	•	•
W	NBR compatible with fluids HFA-HFB-HFC	•	•	

Connections

B G 1”

F SAE 16 - 1 5/16” - 12 UN

Connection for differential indicator

1 Without

2 With standard connection

Filtration rating (filter media)

A03 Inorganic microfiber 3 µm
A06 Inorganic microfiber 6 µm
A10 Inorganic microfiber 10 µm
A16 Inorganic microfiber 16 µm
A25 Inorganic microfiber 25 µm
M25 Wire mesh 25 µm
M60 Wire mesh 60 µm
M90 Wire mesh 90 µm
P10 Resin impregnated paper 10 µm
P25 Resin impregnated paper 25 µm

Element Δp

N 20 bar

Execution

P01 MP Filtri standard
Pxx Customized

FILTER ELEMENT

Configuration example: CU110 | 4 | A10 | A | N | P01

Element series and size

CU110

Element length

1 | 2 | 3 | 4 |

Filtration rating (filter media)

A03 Inorganic microfiber 3 µm
A06 Inorganic microfiber 6 µm
A10 Inorganic microfiber 10 µm
A16 Inorganic microfiber 16 µm
A25 Inorganic microfiber 25 µm
M25 Wire mesh 25 µm
M60 Wire mesh 60 µm
M90 Wire mesh 90 µm
P10 Resin impregnated paper 10 µm
P25 Resin impregnated paper 25 µm

Seals

		Filtration rating Axx	Mxx	Pxx
A	NBR	•	•	•
V	FPM	•	•	•
W	NBR compatible with fluids HFA-HFB-HFC	•	•	

Element Δp

N 20 bar

Execution

P01 MP Filtri standard
Pxx Customized

ACCESSORIES

Differential indicators		page
DEA	Electrical differential indicator	445
DEM	Electrical differential indicator	445-446
DLA	Electrical / visual differential indicator	446-447
DLE	Electrical / visual differential indicator	447
DTA	Electronic differential indicator	448
DVA	Visual differential indicator	448
DVM	Visual differential indicator	448

Additional features		page
T2	Plug	449

Dimensions

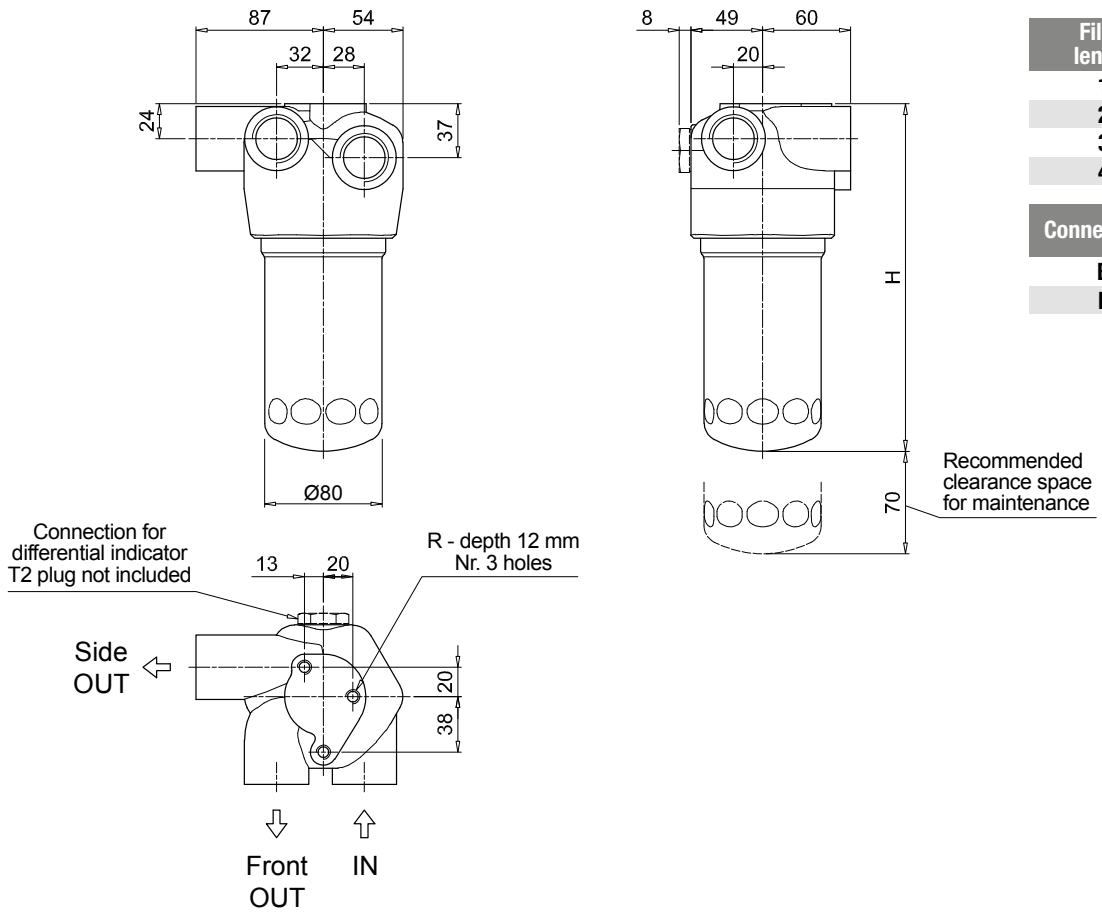

LMP123	
Filter length	**H [mm]**
1	182
2	215
3	265
4	365

Connections	**R**
B	M10
F	3/8" UNC

Order number for spare parts

LMP 110 - 112 - 116 - 118 - 119	LMP 120	LMP 122 - 123

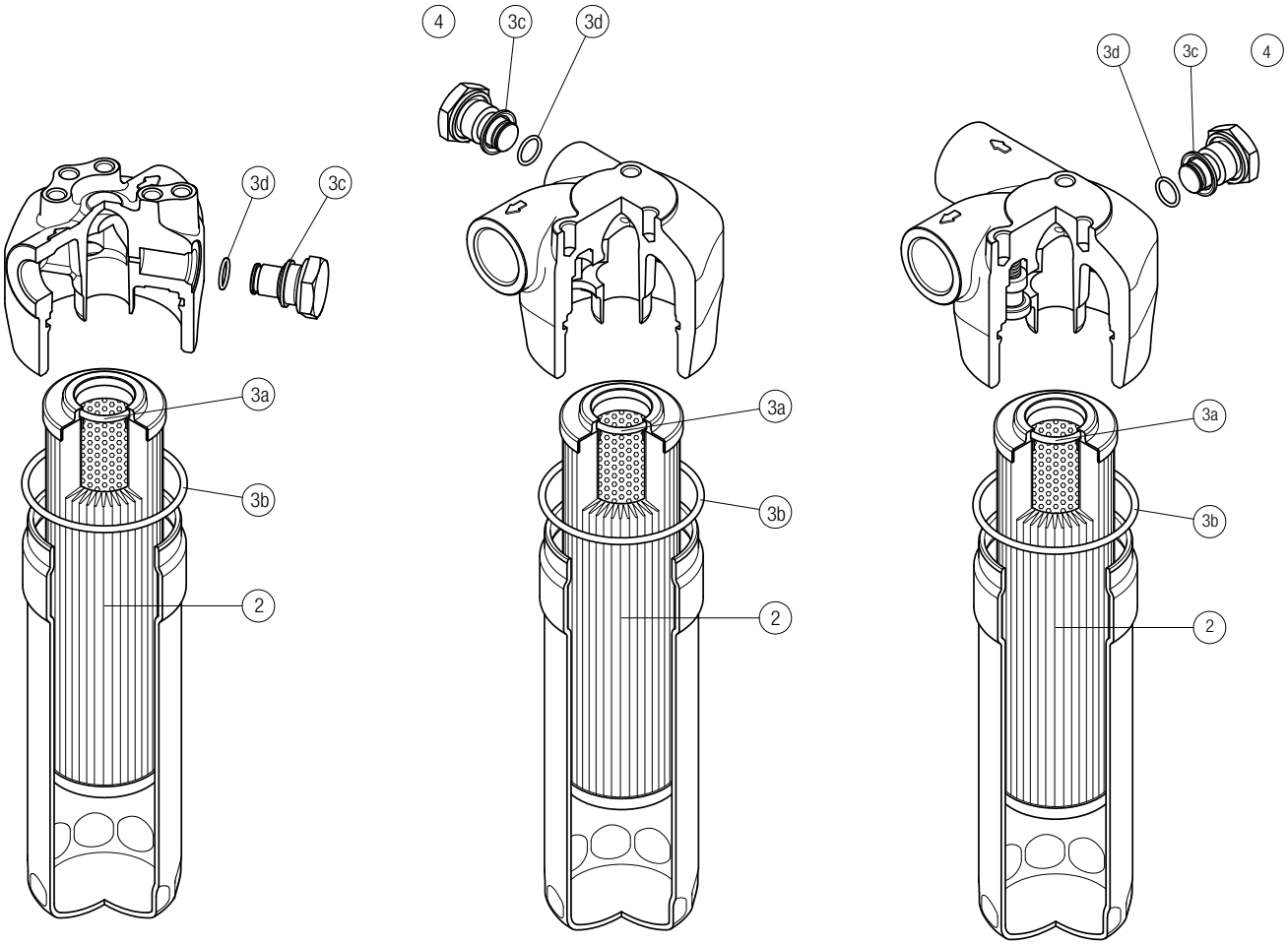

Item:	Q.ty: 1 pc. 2	Q.ty: 1 pc. 3 (3a ÷ 3d)		Q.ty: 1 pc. 4	
Filter series	Filter element	Seal Kit code number NBR	FPM	Indicator connection plug NBR	FPM
LMP 110-112-116 -118-119 LMP 120 LMP 122-123	See order table	02050478	02050479	T2H	T2V

LMP 210-211

Maximum working pressure up to 6 MPa (60 bar) - Flow rate up to 365 l/min

LMP 210-211 GENERAL INFORMATION

Description

Low & Medium Pressure filters

Maximum working pressure up to 6 MPa (60 bar)
Flow rate up to 365 l/min

LMP210 is a range of versatile low pressure filter for transmission, protection of sensitive components in low pressure hydraulic systems and filtration of the coolant into the machine tools.
They are also suitable for the off-line filtration of small reservoirs.
They are directly connected to the lines of the system through the hydraulic fittings.

Available features:
- Flanged connections up to 1 1/2", for a maximum flow rate of 365 l/min (LMP210)
- Female threaded connections up to 1 1/2", for a maximum return flow rate of 365 l/min (LMP211)
- Fine filtration rating, to get a good cleanliness level into the system
- Water removal elements, to remove the free water from the hydraulic fluid. For further information, see the Contamination Management document and the dedicate leaflet.
- Bypass valve, to relieve excessive pressure drop across the filter media
- Visual, electrical and electronic differential clogging indicators

Common applications:
Delivery lines, in any low pressure industrial equipment or mobile machines

Technical data

Filter housing materials
- Head: Aluminium
- Bowl: Cataphoretic Painted Steel
- Bypass valve: AISI 304 - Nylon

Pressure
- Test pressure: 9 MPa (90 bar)
- Burst pressure: 21 MPa (210 bar)
- Pulse pressure fatigue test: 1 000 000 cycles with pressure from 0 to 6 MPa (60 bar)

Bypass valve
- Opening pressure 350 kPa (3.5 bar) ±10%
- Other opening pressures on request.

Δp element type
- Microfibre filter elements - series N: 20 bar
- Fluid flow through the filter element from OUT to IN

Seals
- Standard NBR series A
- Optional FPM series V

Temperature
From -25 °C to +110 °C

Connections
Inlet/Outlet In-Line

Note
LMP 210 - 211 filters are provided for vertical mounting

Weights [kg] and volumes [dm³]

Filter series	Weights [kg]				Volumes [dm³]			
	Length	1	2	3	Length	1	2	3
LMP 210-211		3.10	4.80	6.40		1.60	2.10	2.80

FILTER ASSEMBLY SIZING
Flow rates [l/min]

		Filter element design - N Series									
Filter series	Length	A03	A06	A10	A16	A25	M25	M60	M90	P10	P25
LMP 210	**1**	106	130	190	200	221	286	287	287	261	265
	2	153	175	220	237	249	288	289	290	265	269
	3	204	214	248	260	265	289	290	291	277	281
LMP 211	**1**	118	149	227	240	269	358	359	360	324	330
	2	178	207	268	292	307	361	362	363	329	335
	3	247	260	306	323	329	362	363	364	345	351

Maximum flow rate for a complete low and medium pressure filter with a pressure drop Δp = 0.7 bar.
The reference fluid has a kinematic viscosity of 30 mm^2/s (cSt) and a density of 0.86 kg/dm^3.
For different pressure drop or fluid viscosity we recommend to use our selection software available on www.mpfiltri.com.
You can also calculate the right size using the formulas present on the FILTER SIZING paragraph at the beginning of the full catalogue or at the beginning of the filter family brochure.
Please, contact our Sales Department for further additional information.

Hydraulic symbols

Filter series	Execution S	Execution B
LMP 210-211	•	•

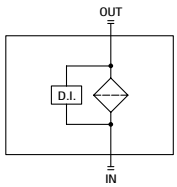

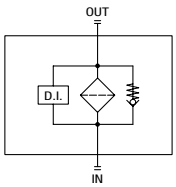

Pressure drop

Filter housings
Δp pressure drop

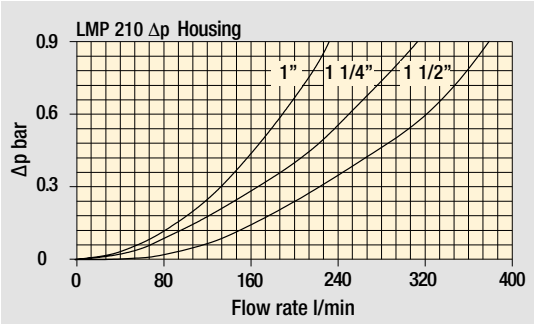

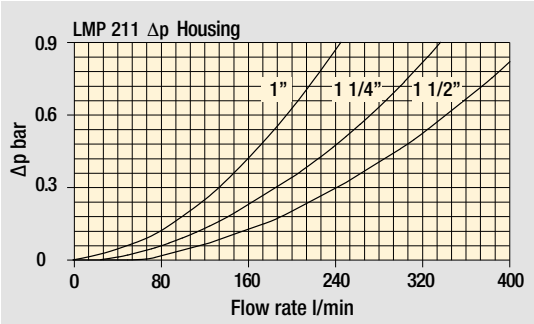

Bypass valve
pressure drop

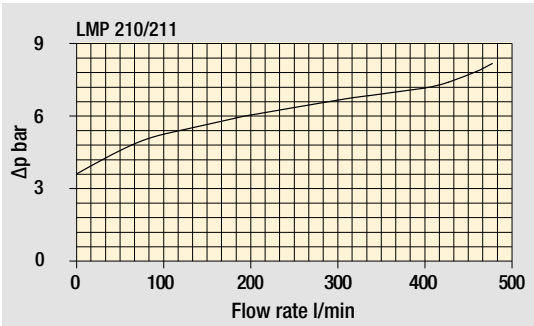

The curves are plotted using mineral oil with density of 0.86 kg/dm^3 in compliance with ISO 3968. Δp varies proportionally with density.

LMP 210

Designation & Ordering code

COMPLETE FILTER

Configuration example: LMP210 | 3 | B | A | F1 | A10 | N | P01

Series and size

LMP210

Length

1 | **2** | **3**

Bypass valve

S Without bypass

B 3.5 bar

Seals and treatments		Filtration rating Axx	Mxx	Pxx
A	NBR	•	•	•
V	FPM	•	•	•
W	NBR compatible with fluids HFA-HFB-HFC	•	•	

Connections

F1 1" SAE 3000 psi/M
F2 1 1/4" SAE 3000 psi/M
F3 1 1/2" SAE 3000 psi/M
F4 1" SAE 3000 psi/UNC
F5 1 1/4" SAE 3000 psi/UNC
F6 1 1/2" SAE 3000 psi/UNC

Filtration rating (filter media)

A03 Inorganic microfiber 3 µm
A06 Inorganic microfiber 6 µm
A10 Inorganic microfiber 10 µm
A16 Inorganic microfiber 16 µm
A25 Inorganic microfiber 25 µm
M25 Wire mesh 25 µm
M60 Wire mesh 60 µm
M90 Wire mesh 90 µm
P10 Resin impregnated paper 10 µm
P25 Resin impregnated paper 25 µm

WA025 Water absorber inorganic microfiber 25 µm

Element Δp

N 20 bar

Execution

P01 MP Filtri standard
Pxx Customized

FILTER ELEMENT

Configuration example: CU210 | 3 | A10 | A | N | P01

Element series and size

CU210

Element length

1 | **2** | **3**

Filtration rating (filter media)

A03 Inorganic microfiber 3 µm
A06 Inorganic microfiber 6 µm
A10 Inorganic microfiber 10 µm
A16 Inorganic microfiber 16 µm
A25 Inorganic microfiber 25 µm
M25 Wire mesh 25 µm
M60 Wire mesh 60 µm
M90 Wire mesh 90 µm
P10 Resin impregnated paper 10 µm
P25 Resin impregnated paper 25 µm

WA025 Water absorber inorganic microfiber 25 µm

Seals		Filtration rating Axx	Mxx	Pxx
A	NBR	•	•	•
V	FPM	•	•	•
W	NBR compatible with fluids HFA-HFB-HFC	•	•	

Element Δp

N 20 bar

Execution

P01 MP Filtri standard
Pxx Customized

ACCESSORIES

Differential indicators		page
DEA	Electrical differential indicator	445
DEM	Electrical differential indicator	445-446
DLA	Electrical / visual differential indicator	446-447
DLE	Electrical / visual differential indicator	447
DTA	Electronic differential indicator	448
DVA	Visual differential indicator	448
DVM	Visual differential indicator	448

Additional features		page
T2	Plug	449

Dimensions

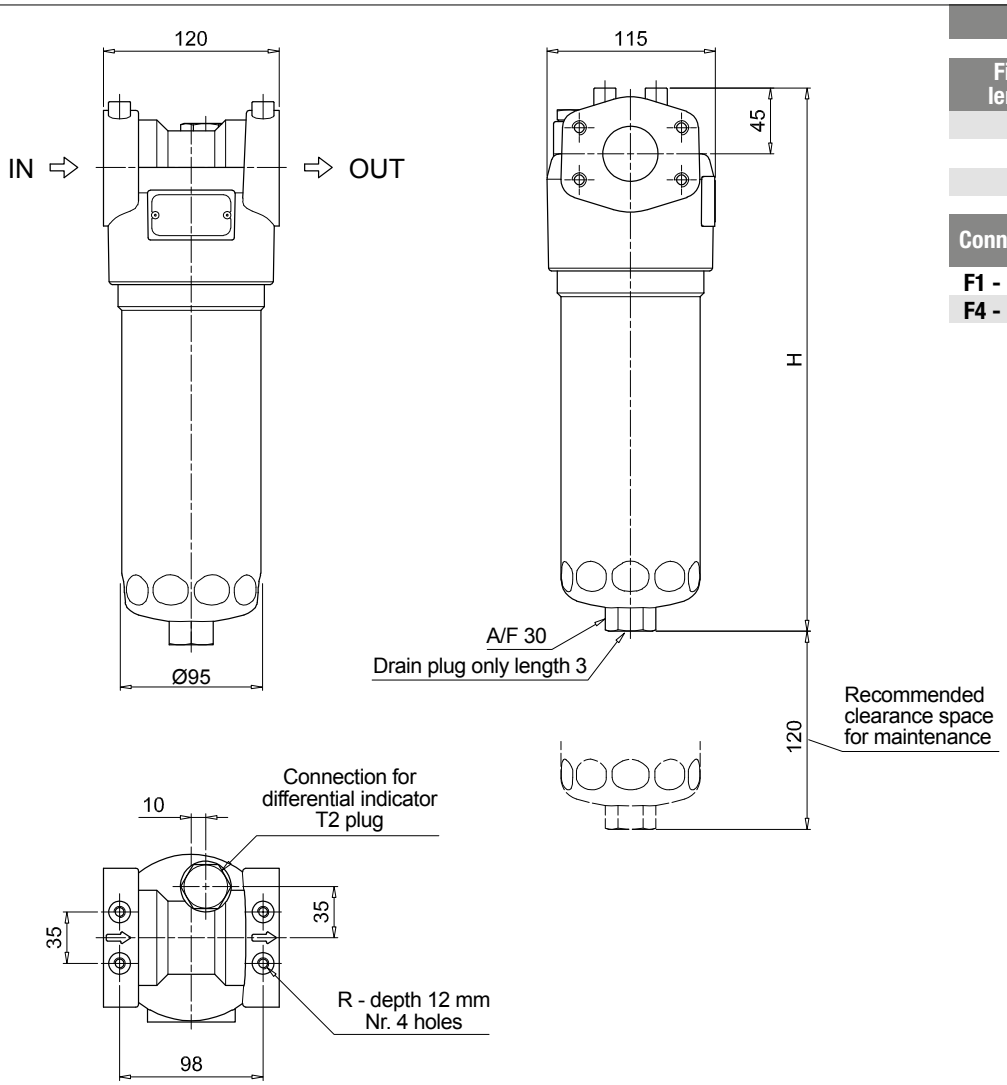

LMP210	
Filter length	**H [mm]**
1	362
2	492
3	633

Connections	**R**
F1 - F2 - F3	M8
F4 - F5 - F6	5/16" UNC

LMP 211

Designation & Ordering code

COMPLETE FILTER

Configuration example: LMP211 | 3 | B | A | D | 6 | A10 | N | P01

Series and size

LMP211

Length

1 | **2** | **3**

Bypass valve

S Without bypass

B 3.5 bar

Seals and treatments

		Filtration rating Axx	Mxx	Pxx
A	NBR	•	•	•
V	FPM	•	•	•
W	NBR compatible with fluids HFA-HFB-HFC	•	•	

Connections

A G 1”
B G 1 1/4”
C G 1 1/2”
D 1” NPT
E 1 1/4” NPT
F 1 1/2” NPT
G SAE 16 - 1 5/16” - 12 UN
H SAE 20 - 1 5/8” - 12 UN
I SAE 24 - 1 7/8” - 12 UN

Connection for differential indicator

6 With plugged connection

Filtration rating (filter media)

A03 Inorganic microfiber 3 µm
A06 Inorganic microfiber 6 µm
A10 Inorganic microfiber 10 µm
A16 Inorganic microfiber 16 µm
A25 Inorganic microfiber 25 µm
M25 Wire mesh 25 µm
M60 Wire mesh 60 µm
M90 Wire mesh 90 µm
P10 Resin impregnated paper 10 µm
P25 Resin impregnated paper 25 µm

WA025 Water absorber inorganic microfiber 25 µm

Element Δp

N 20 bar

Execution

P01 MP Filtri standard
Pxx Customized

FILTER ELEMENT

Configuration example: CU210 | 3 | A10 | A | N | P01

Element series and size

CU210

Element length

1 | **2** | **3**

Filtration rating (filter media)

A03 Inorganic microfiber 3 µm
A06 Inorganic microfiber 6 µm
A10 Inorganic microfiber 10 µm
A16 Inorganic microfiber 16 µm
A25 Inorganic microfiber 25 µm
M25 Wire mesh 25 µm
M60 Wire mesh 60 µm
M90 Wire mesh 90 µm
P10 Resin impregnated paper 10 µm
P25 Resin impregnated paper 25 µm

WA025 Water absorber inorganic microfiber 25 µm

Seals

		Filtration rating Axx	Mxx	Pxx
A	NBR	•	•	•
V	FPM	•	•	•
W	NBR compatible with fluids HFA-HFB-HFC	•	•	

Element Δp

N 20 bar

Execution

P01 MP Filtri standard
Pxx Customized

ACCESSORIES

Differential indicators

		page
DEA	Electrical differential indicator	445
DEM	Electrical differential indicator	445-446
DLA	Electrical / visual differential indicator	446-447
DLE	Electrical / visual differential indicator	447
DTA	Electronic differential indicator	448
DVA	Visual differential indicator	448
DVM	Visual differential indicator	448

Additional features

		page
T2	Plug	449

Dimensions

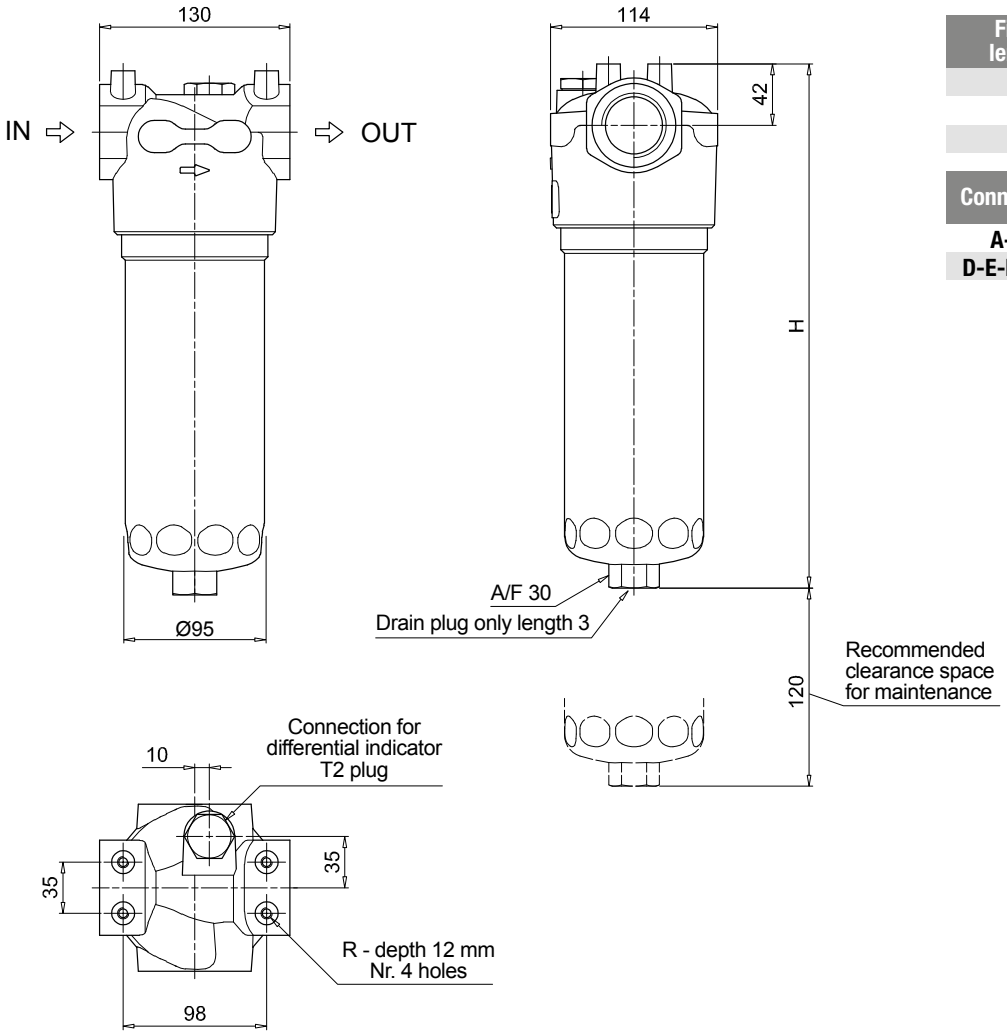

LMP211	
Filter length	**H [mm]**
1	358
2	488
3	629

Connections	**R**
A-B-C	M8
D-E-F-G-H-I	5/16" UNC

LMP 210-211 SPARE PARTS

Order number for spare parts

LMP 210

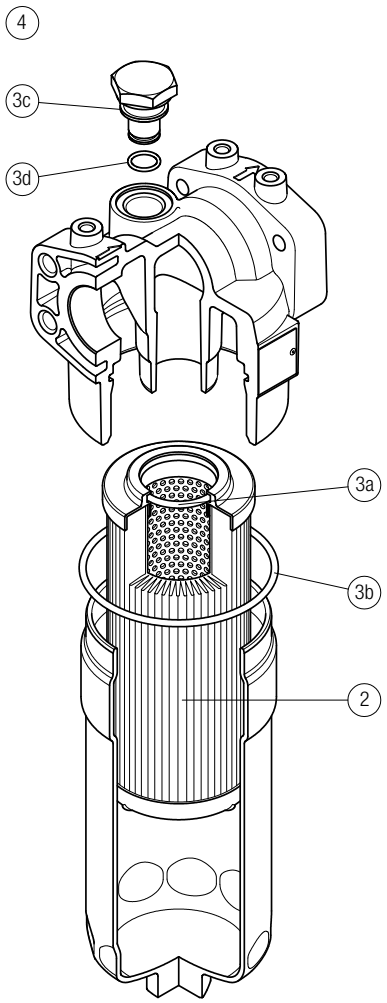

LMP 211

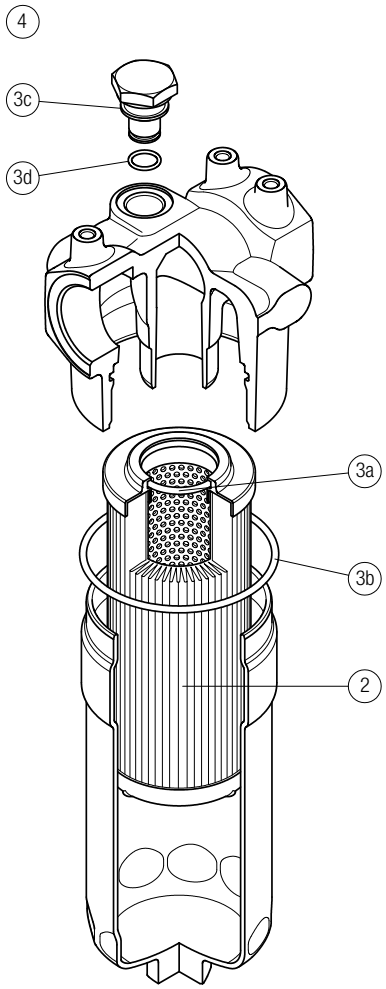

Item:	Q.ty: 1 pc. 2	Q.ty: 1 pc. 3 (3a ÷ 3d)		Q.ty: 1 pc. 4	
Filter series	Filter element	Seal Kit code number NBR	FPM	Indicator connection plug NBR	FPM
LMP 210-211	See order table	02050435	02050436	T2H	T2V

LMP 400-401 & 430-431 series

Maximum working pressure up to 6 MPa (60 bar) - Flow rate up to 780 l/min

Description

Low & Medium Pressure filters

Maximum working pressure up to 6 MPa (60 bar)
Flow rate up to 780 l/min

LMP400 is a range of low pressure filter with large filtration surface mainly suitable for lubrication, off-line filtration of the reservoirs and filtration equipment.
They are directly connected to the lines of the system through the hydraulic fittings.

Available features:

- Female threaded connections up to 2" and flanged connections up to 2 1/2", for a maximum flow rate of 780 l/min
- In line or 90° connections, to meet any type of application
- Base-mounting design also available, for ease of the replacement of the filter element
- Fine filtration rating, to get a good cleanliness level into the system
- Water removal elements, to remove the free water from the hydraulic fluid. For further information, see the Contamination Management document and the dedicate leaflet.
- Bypass valve, to relieve excessive pressure drop across the filter media
- Vent ports, to avoid air trapped into the filter going into the system
- Drain ports, to remove the fluid from the housing prior the maintenance work
- Visual, electrical and electronic differential clogging indicators

Common applications:

- Off-line filtration of reservoirs
- Filtration systems

Technical data

Filter housing materials

- Head: Anodized Aluminium
- Housing: Anodized Aluminium
- Bypass valve: Steel

Pressure LMP 400 length 2 -3 - 4

- Working pressure: 6 MPa (60 bar)
- Test pressure: 9 MPa (90 bar)
- Burst pressure: 21 MPa (210 bar)
- Pulse pressure fatigue test: 1 000 000 cycles with pressure from 0 to 6 MPa (60 bar)

Pressure LMP 400 length 5 - 6

- Working pressure: 5 MPa (50 bar)
- Test pressure: 7.5 MPa (75 bar)
- Burst pressure: 15 MPa (150 bar)
- Pulse pressure fatigue test: 1 000 000 cycles with pressure from 0 to 5 MPa (50 bar)

Bypass valve

- Opening pressure 350 kPa (3.5 bar) ±10%
- Other opening pressures on request.

Δp element type

- Microfibre filter elements - series N - W: 20 bar
- Fluid flow through the filter element from OUT to IN

Seals

- Standard NBR series A
- Optional FPM series V

Temperature

From -25 °C to +110 °C

Connections

LMP 400 - 430: In-line Inlet/Outlet
LMP 401 - 431: 90° Inlet/Outlet

Note

LMP 400 filters
are provided
for vertical mounting

Weights [kg] and volumes [dm³]

Filter series	Weights [kg]						Volumes [dm³]					
	Length	2	3	4	5	6	Length	2	3	4	5	6
LMP 400-401 & 430-431		7.20	8.10	8.80	11.90	14.40		3.50	5.00	6.50	9.50	13.50

FILTER ASSEMBLY SIZING
Flow rates [l/min]

Filter series	Length	Filter element design - N Series							
		A03	A06	A10	A16	A25	M25 M60 M90	P10	P25
LMP 400	2	205	244	370	411	515	720	524	556
	3	280	333	474	515	602	760	637	660
	4	347	400	535	564	637	769	660	688
	5	459	501	610	660	717	781	700	721
	6	504	575	676	689	728	783	708	727
LMP 401	2	200	236	347	382	468	628	475	501
	3	268	315	434	468	537	659	565	582
	4	328	373	484	507	565	665	582	603
	5	423	456	544	582	626	674	613	629
	6	459	516	594	604	634	676	619	633
LMP 430	5	459	501	610	660	717	781	700	721
	6	504	575	676	689	728	783	708	727
LMP 431	5	423	456	544	582	626	674	613	629
	6	459	516	594	604	634	676	619	633

Maximum flow rate for a complete low and medium pressure filter with a pressure drop Δp = 0.7 bar.
The reference fluid has a kinematic viscosity of 30 mm^2/s (cSt) and a density of 0.86 kg/dm^3.
For different pressure drop or fluid viscosity we recommend to use our selection software available on www.mpfiltri.com.
You can also calculate the right size using the formulas present on the FILTER SIZING paragraph at the beginning of the full catalogue or at the beginning of the filter family brochure.
Please, contact our Sales Department for further additional information.

LMP 430-431: execution P02

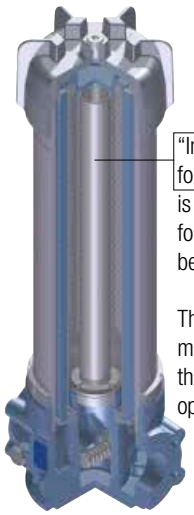

"Internal tube for reduced flow rate" is recommended for flow rate values below 100/150 l/min.

The use of option P02 makes it easier to fill the housing with the operating fluid.

Hydraulic symbols

Filter series	Execution S	Execution B
LMP 400-401 & 430-431	•	•

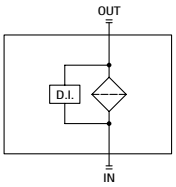

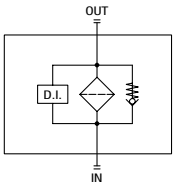

Pressure drop

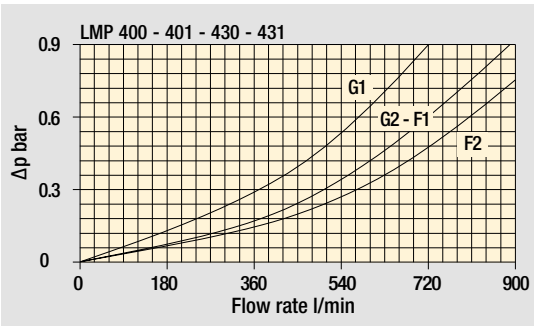

Filter housings Δp pressure drop

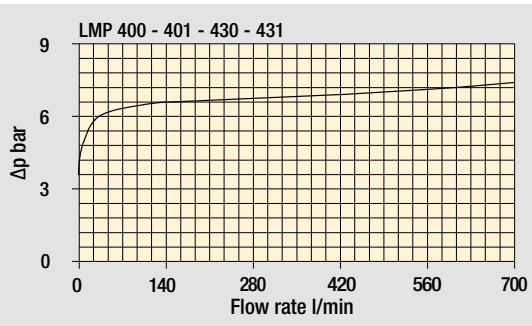

Bypass valve pressure drop

The curves are plotted using mineral oil with density of 0.86 kg/dm^3 in compliance with ISO 3968. Δp varies proportionally with density.

LMP 400-401

Designation & Ordering code

COMPLETE FILTER

Configuration example: LMP401 | 3 | B | A | G1 | A10 | N | P01

Series and size

LMP400 | **LMP401**

Length

2 | **3** | **4** | **5** | **6** |

Bypass valve

S Without bypass

B 3.5 bar

Seals and treatments	Axx	Mxx	Pxx
A NBR	•	•	•
V FPM	•	•	•
W NBR compatible with fluids HFA-HFB-HFC	•	•	

Filtration rating

Connections

G1 G 1 1/2"
G2 G 2"
G3 1 1/2" NPT
G4 2" NPT
G5 SAE 24 - 1 7/8" - 12 UN
G6 SAE 32 - 2 1/2" - 12 UN

F1 2" SAE 3000 psi/M
F2 2 1/2" SAE 3000 psi/M
F3 2" SAE 3000 psi/UNC
F4 2 1/2" SAE 3000 psi/UNC

Filtration rating (filter media)

A03 Inorganic microfiber 3 µm
A06 Inorganic microfiber 6 µm
A10 Inorganic microfiber 10 µm
A16 Inorganic microfiber 16 µm
A25 Inorganic microfiber 25 µm

M25 Wire mesh 25 µm
M60 Wire mesh 60 µm
M90 Wire mesh 90 µm
P10 Resin impregnated paper 10 µm
P25 Resin impregnated paper 25 µm

WA025 Water absorber inorganic microfiber 25 µm

Element Δp

N 20 bar

Execution	2	3	4	5	6
P01 MP Filtri standard	•	•	•	•	•
P02 Maintenance from the bottom of the housing				•	•
Pxx Customized					

Filter length

FILTER ELEMENT

Configuration example: CU400 | 3 | A10 | A | N | P01

Element series and size

CU400

Element length

2 | **3** | **4** | **5** | **6** |

Filtration rating (filter media)

A03 Inorganic microfiber 3 µm
A06 Inorganic microfiber 6 µm
A10 Inorganic microfiber 10 µm
A16 Inorganic microfiber 16 µm
A25 Inorganic microfiber 25 µm

M25 Wire mesh 25 µm
M60 Wire mesh 60 µm
M90 Wire mesh 90 µm
P10 Resin impregnated paper 10 µm
P25 Resin impregnated paper 25 µm

WA025 Water absorber inorganic microfiber 25 µm

Seals	Axx	Mxx	Pxx
A NBR	•	•	•
V FPM	•	•	•
W NBR compatible with fluids HFA-HFB-HFC	•	•	

Filtration rating

Element Δp

N 20 bar

Execution

P01 MP Filtri standard
Pxx Customized

ACCESSORIES

Differential indicators		page
DEA	Electrical differential indicator	445
DEM	Electrical differential indicator	445-446
DLA	Electrical / visual differential indicator	446-447
DLE	Electrical / visual differential indicator	447
DTA	Electronic differential indicator	448
DVA	Visual differential indicator	448
DVM	Visual differential indicator	448

Additional features		page
T2	Plug	449

Dimensions

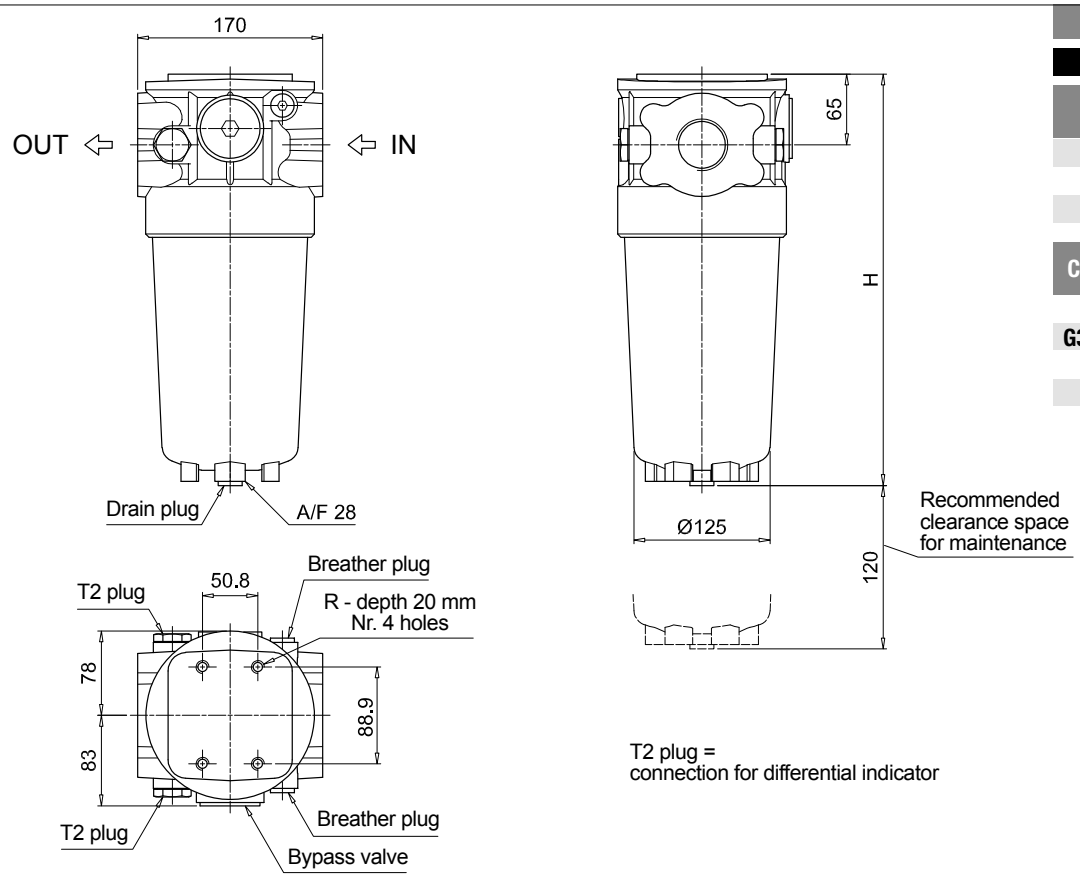

LMP400

Length 2 - 3 - 4

Filter length	H [mm]
2	378
3	478
4	578

Connections	R
G1-G2	M12
G3-G4-G5-G6	1/2" UNC
F1-F2	M12
F3-F4	1/2" UNC

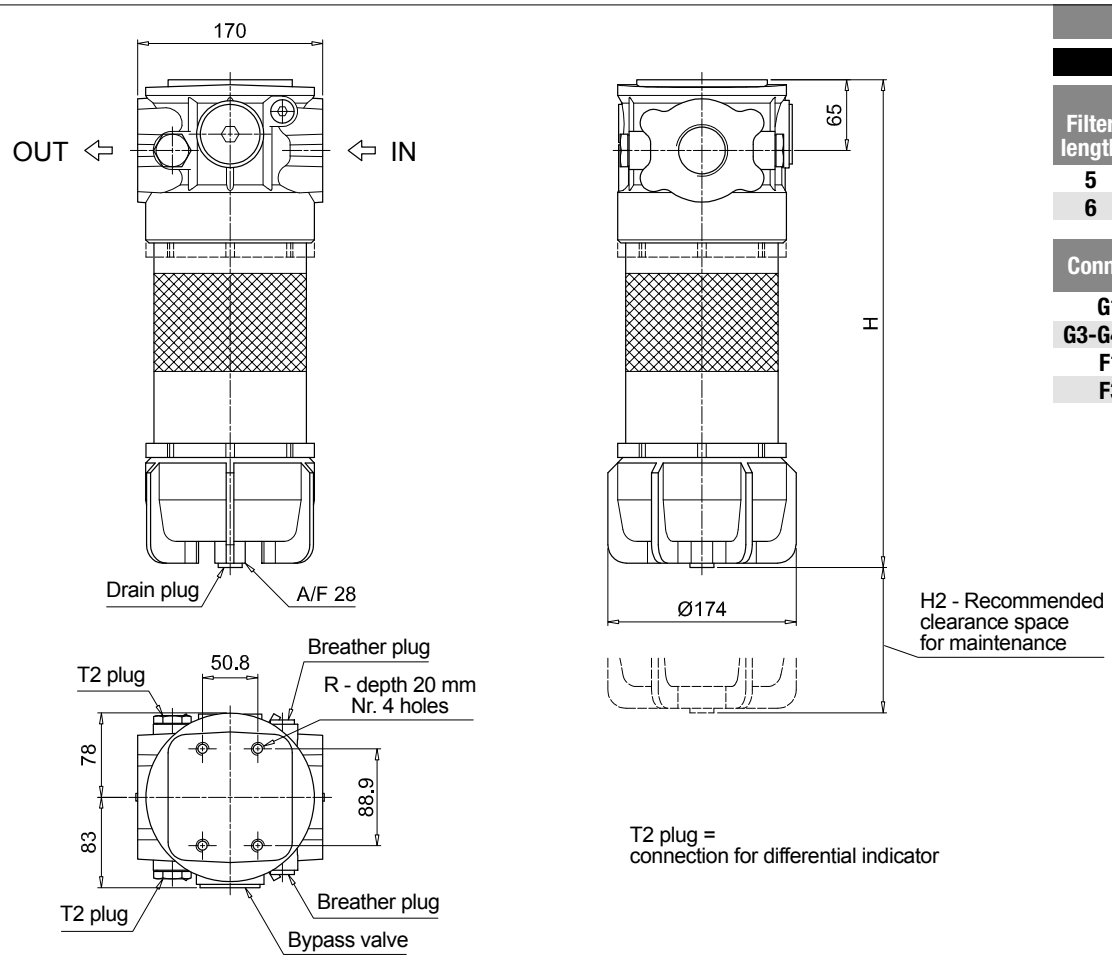

LMP400

Length 5 - 6

Filter length	H [mm]	H2 [mm] Execution P01	H2 [mm] Execution P02
5	828	120	660
6	1158	120	690

Connections	R
G1-G2	M12
G3-G4-G5-G6	1/2" UNC
F1-F2	M12
F3-F4	1/2" UNC

LMP 400-401

Dimensions

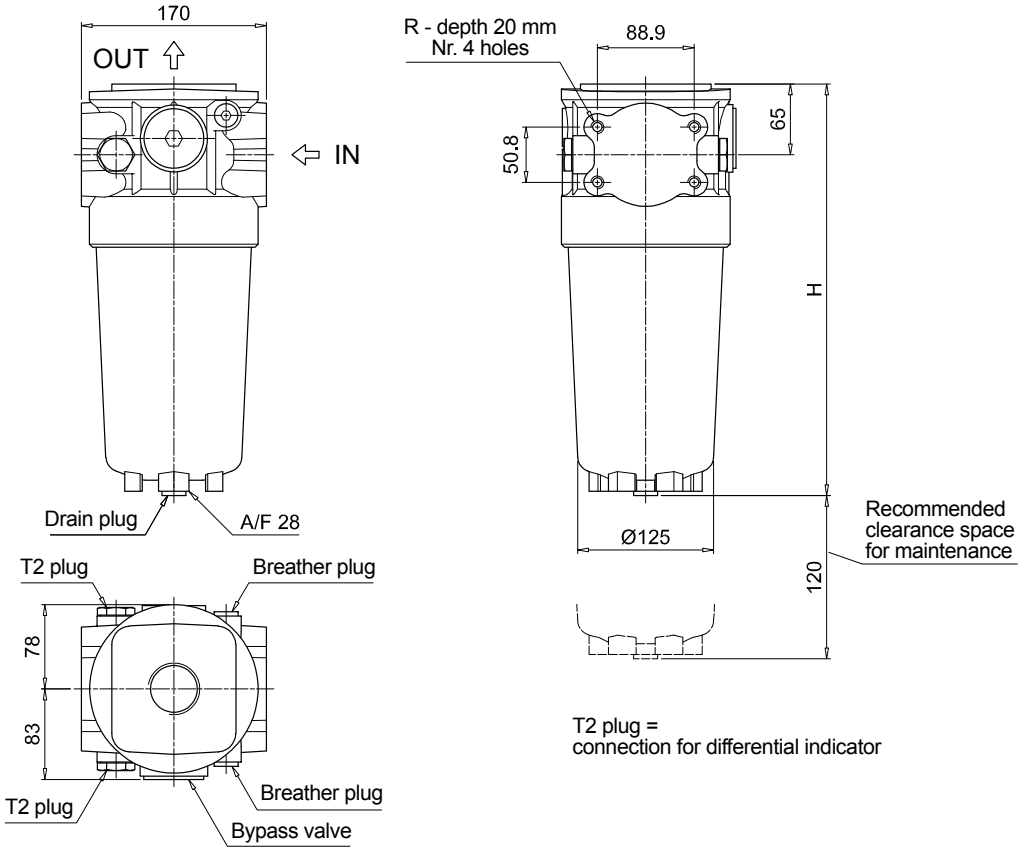

LMP401

Length 2 - 3 - 4

Filter length	H [mm]
2	378
3	478
4	578

Connections	R
G1-G2	M12
G3-G4-G5-G6	1/2" UNC
F1-F2	M12
F3-F4	1/2" UNC

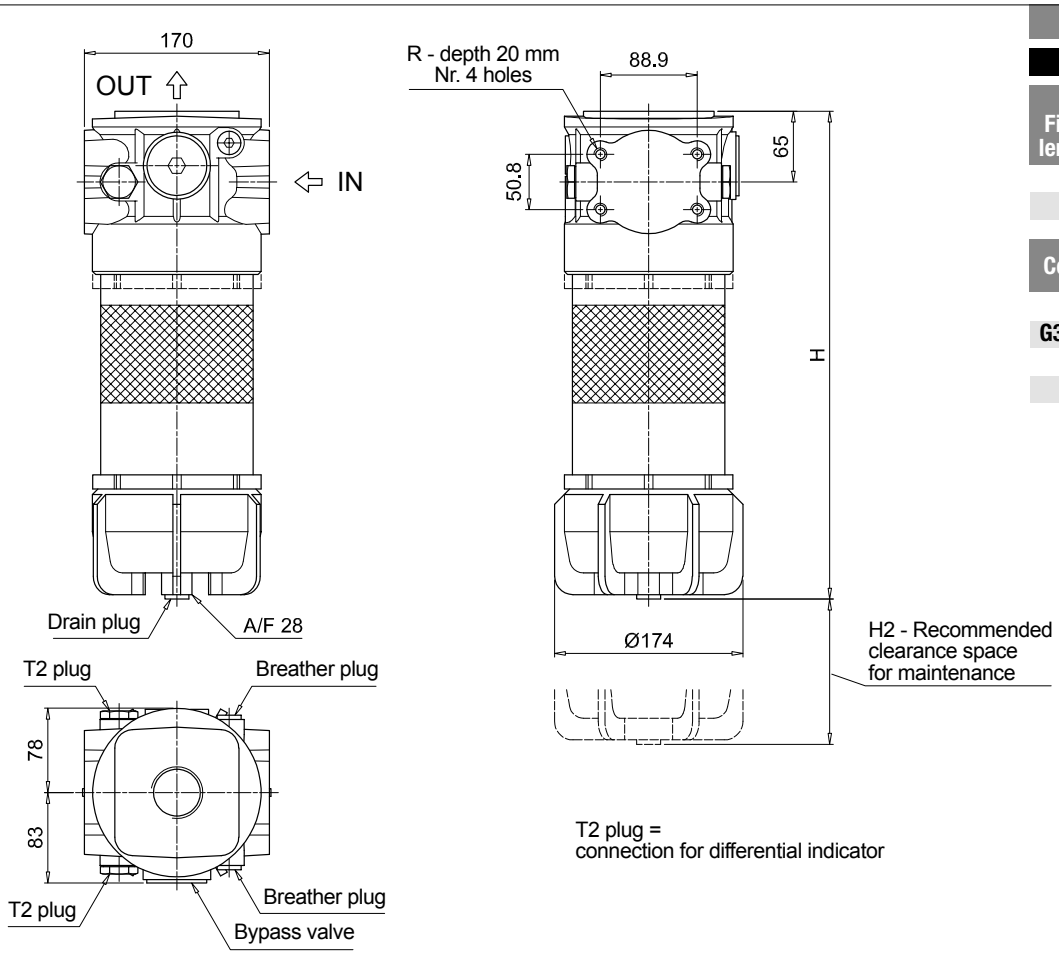

LMP401

Length 5 - 6

Filter length	H [mm]	H2 [mm] Execution P01	H2 [mm] Execution P02
5	828	120	660
6	1158	120	690

Connections	R
G1-G2	M12
G3-G4-G5-G6	1/2" UNC
F1-F2	M12
F3-F4	1/2" UNC

LMP 430-431

Designation & Ordering code

COMPLETE FILTER

Configuration example: LMP431 | 5 | B | A | G1 | A10 | N | P01

Series and size

LMP430 | **LMP431**

Length

5 | **6**

Bypass valve

S Without bypass

B 3.5 bar

Seals and treatments		Filtration rating Axx	Mxx	Pxx
A	NBR	•	•	•
V	FPM	•	•	•
W	NBR compatible with fluids HFA-HFB-HFC	•	•	

Connections

G1 G 1 1/2”
G2 G 2”
G3 1 1/2” NPT
G4 2” NPT
G5 SAE 24 - 1 7/8” - 12 UN
G6 SAE 32 - 2 1/2” - 12 UN

F1 2” SAE 3000 psi/M
F2 2 1/2” SAE 3000 psi/M
F3 2” SAE 3000 psi/UNC
F4 2 1/2” SAE 3000 psi/UNC

Filtration rating (filter media)

A03 Inorganic microfiber 3 µm
A06 Inorganic microfiber 6 µm
A10 Inorganic microfiber 10 µm
A16 Inorganic microfiber 16 µm
A25 Inorganic microfiber 25 µm

M25 Wire mesh 25 µm
M60 Wire mesh 60 µm
M90 Wire mesh 90 µm
P10 Resin impregnated paper 10 µm
P25 Resin impregnated paper 25 µm

WA025 Water absorber inorganic microfiber 25 µm

Element Δp

N 20 bar

Execution

P01 MP Filtri standard
P02 With internal tube for reduced flow rate
Pxx Customized

FILTER ELEMENT

Configuration example: CU400 | 5 | A10 | A | N | P01

Element series and size

CU400

Element length

5 | **6**

Filtration rating (filter media)

A03 Inorganic microfiber 3 µm
A06 Inorganic microfiber 6 µm
A10 Inorganic microfiber 10 µm
A16 Inorganic microfiber 16 µm
A25 Inorganic microfiber 25 µm

M25 Wire mesh 25 µm
M60 Wire mesh 60 µm
M90 Wire mesh 90 µm
P10 Resin impregnated paper 10 µm
P25 Resin impregnated paper 25 µm

WA025 Water absorber inorganic microfiber 25 µm

Seals		Filtration rating Axx	Mxx	Pxx
A	NBR	•	•	•
V	FPM	•	•	•
W	NBR compatible with fluids HFA-HFB-HFC	•	•	

Element Δp

N 20 bar

Execution

P01 MP Filtri standard
Pxx Customized

ACCESSORIES

Differential indicators		page
DEA	Electrical differential indicator	445
DEM	Electrical differential indicator	445-446
DLA	Electrical / visual differential indicator	446-447
DLE	Electrical / visual differential indicator	447
DTA	Electronic differential indicator	448
DVA	Visual differential indicator	448
DVM	Visual differential indicator	448

Additional features		page
T2	Plug	449

Dimensions

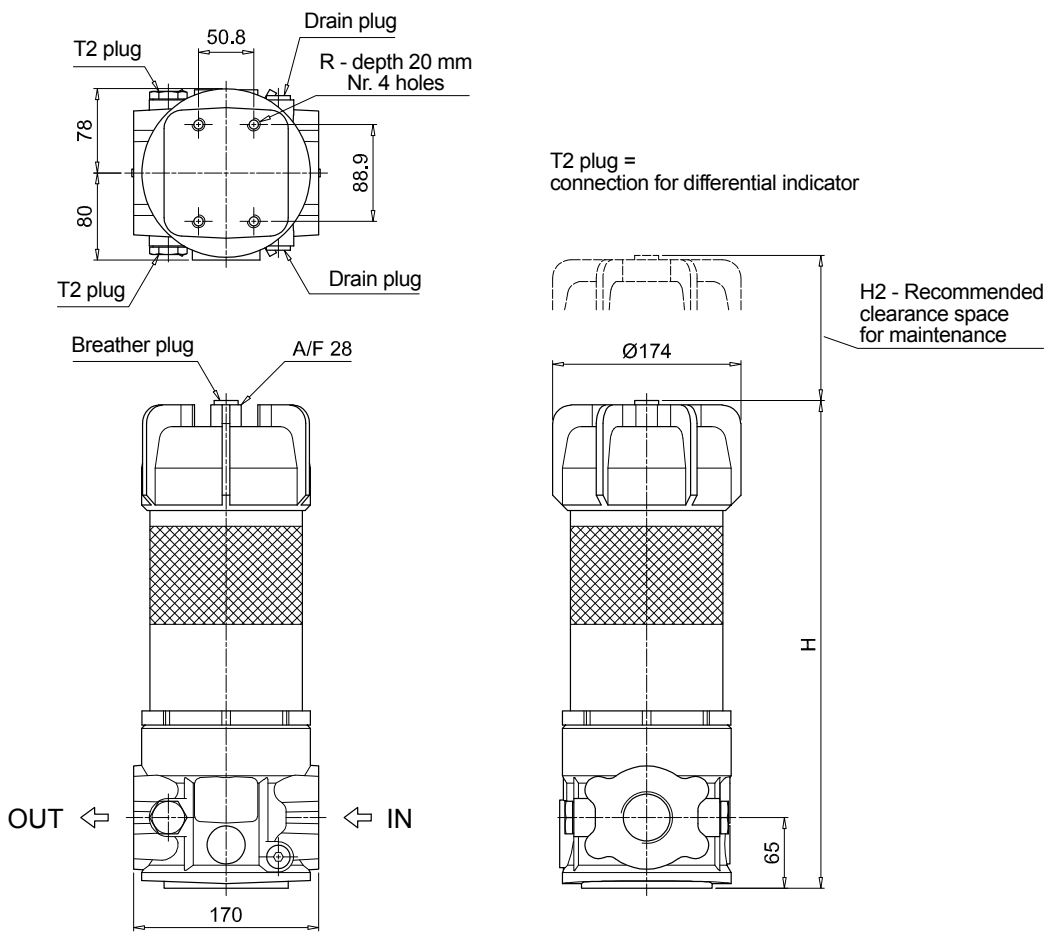

LMP430

Filter length	H [mm]	H2 [mm]
5	828	660
6	1158	690

Connections	R
G1-G2	M12
G3-G4-G5-G6	1/2" UNC
F1-F2	M12
F3-F4	1/2" UNC

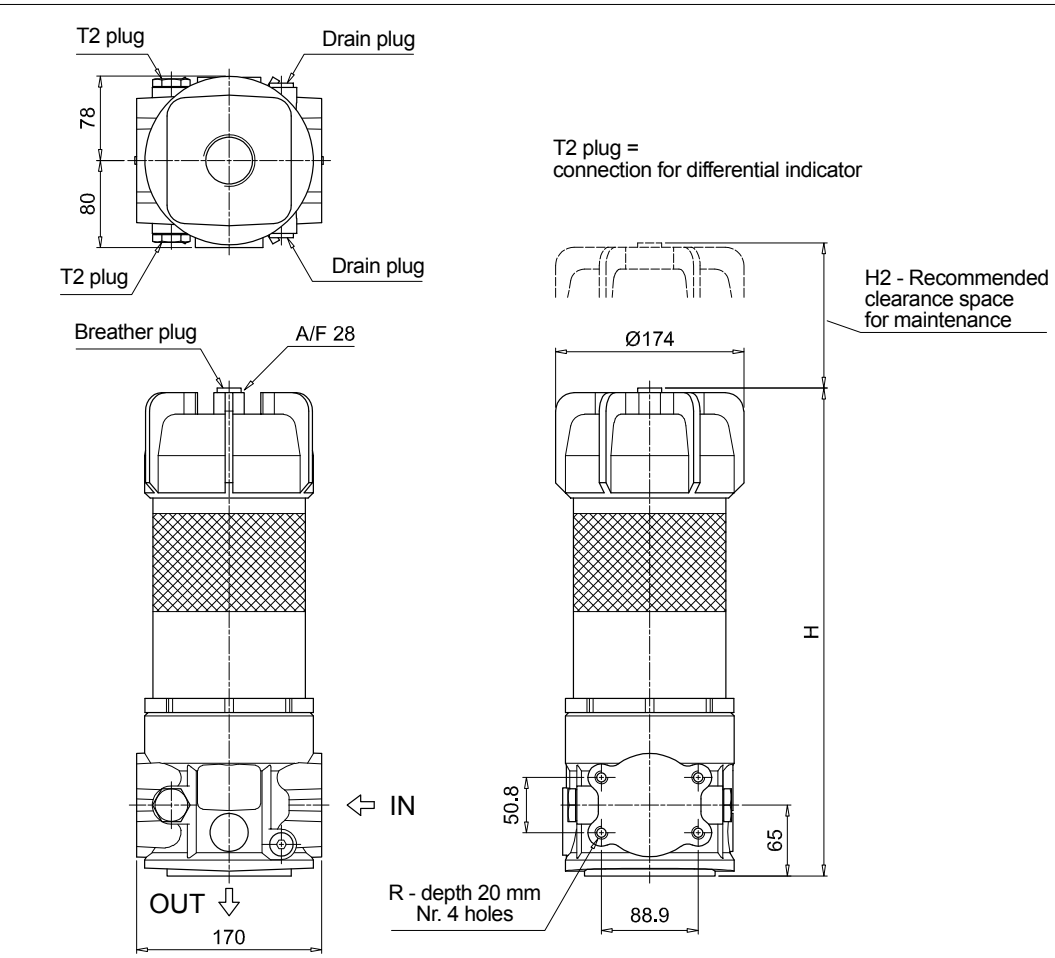

LMP431

Filter length	H [mm]	H2 [mm]
5	828	660
6	1158	690

Connections	R
G1-G2	M12
G3-G4-G5-G6	1/2" UNC
F1-F2	M12
F3-F4	1/2" UNC

Order number for spare parts

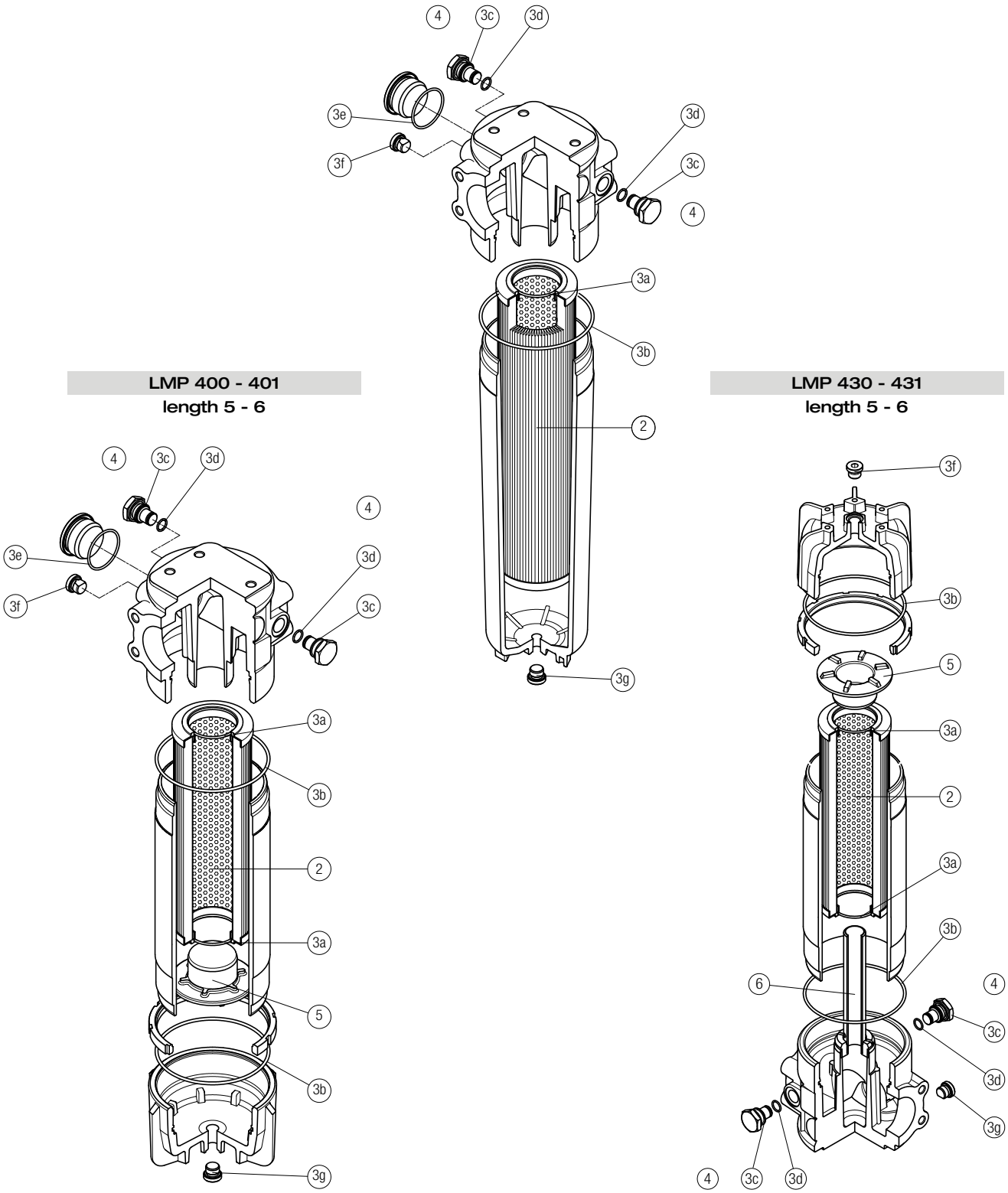

Item:	Q.ty: 1 pc. 2	Q.ty: 1 pc. 3 (3a ÷ 3g)		Q.ty: 2 pcs. 4		Q.ty: 2 pcs. 5		Q.ty: 1 pc. 6	
Filter series	**Filter element**	**Seal Kit code number NBR**	**FPM**	**Indicator connection plug NBR**	**FPM**	**Housing spigot no bypass**	**with bypass**	**Tube assembly**	
LMP 400-401 length 2-3-4	See order table	02050391	02050392	T2H	T2V				
LMP 400-401 length 5-6		02050393	02050394			01044108			
LMP 430-431 length 5-6		02050393	02050394			01044108	02001414	Length 5: 02025041	Length 6: 02025042

LMP 950-951 series

Maximum working pressure up to 3 MPa (30 bar) - Flow rate up to 2400 l/min

LMP 950-951 GENERAL INFORMATION

Description

Low & Medium Pressure filters

Maximum working pressure up to 3 MPa (30 bar)
Flow rate up to 2400 l/min

LMP950 is a range of low pressure filter with large filtration surface mainly suitable for lubrication, off-line filtration of the reservoirs and filtration equipment.
They are directly connected to the lines of the system through the hydraulic fittings.

Available features:
- Flanged connections up to 4", for a maximum flow rate of 2400 l/min
- In line or 90° connections, to meet any type of application
- Base-mounting design, for ease of the replacement of the filter element
- Fine filtration rating, to get a good cleanliness level into the system
- Water removal elements, to remove the free water from the hydraulic fluid. For further information, see the Contamination Management document and the dedicate leaflet.
- Bypass valve, to relieve excessive pressure drop across the filter media
- Vent ports, to avoid air trapped into the filter going into the system
- Drain ports, to remove the fluid from the housing prior the maintenance work
- Visual, electrical and electronic differential clogging indicators

Common applications:
- Off-line filtration of reservoirs
- Filtration systems
- Lubrication systems

Technical data

Filter housing materials
- Head: Anodized Aluminium
- Housing: Anodized Aluminium
- Bypass valve: Anodized Aluminium

Pressure
- Test pressure: 4,5 MPa (45 bar)
- Burst pressure: 12 MPa (120 bar)
- Pulse pressure fatigue test: 1 000 000 cycles with pressure from 0 to 3 MPa (30 bar)

Bypass valve
- Opening pressure 350 kPa (3.5 bar) ±10%
- Other opening pressures on request.

Δp element type
- Microfibre filter elements - series N: 20 bar
- Fluid flow through the filter element from OUT to IN

Seals
- Standard NBR series A
- Optional FPM series V

Temperature
From -25 °C to +110 °C

Connections
LMP 950: In-line Inlet/Outlet
LMP 951: 90° Inlet/Outlet

Note
LMP 950 - 951 filters are provided for vertical mounting

Weights [kg] and volumes [dm³]

Filter series	Weights [kg]		Volumes [dm³]	
	Length 2	3	Length 2	3
LMP 950-951	25.1	33.5	15	28

FILTER ASSEMBLY SIZING
Flow rates [l/min]

Filter series	Length	Filter element design - N Series					
		A03	A06	A10	A16	A25	M25 M60 M90
LMP 950	**2**	613	756	953	1219	1515	2170
	3	1148	1219	1502	1713	1808	2293
LMP 951	**2**	635	789	1007	1308	1649	2420
	3	1226	1308	1634	1881	1993	2566

Maximum flow rate for a complete low and medium pressure filter with a pressure drop Δp = 0.7 bar.
The reference fluid has a kinematic viscosity of 30 mm^2/s (cSt) and a density of 0.86 kg/dm^3.
For different pressure drop or fluid viscosity we recommend to use our selection software available on www.mpfiltri.com.
You can also calculate the right size using the formulas present on the FILTER SIZING paragraph at the beginning of the full catalogue or at the beginning of the filter family brochure.
Please, contact our Sales Department for further additional information.

Execution P02

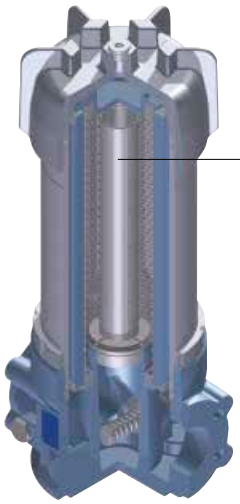

"Internal tube for reduced flow rate" is recommended for flow rate values below 100/150 l/min.

The use of option P02 makes it easier to fill the housing with the operating fluid.

Hydraulic symbols

Filter series	Execution S	Execution B
LMP 950-951	•	•

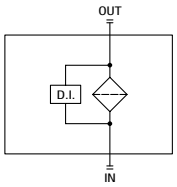

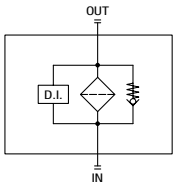

Pressure drop

Filter housings Δp pressure drop

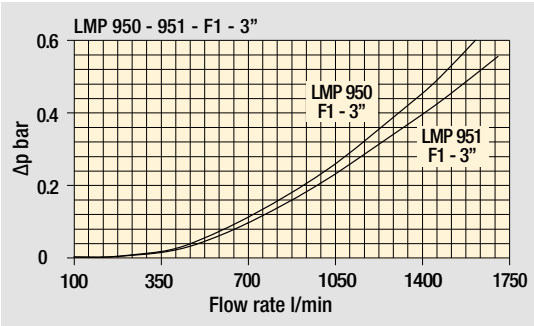

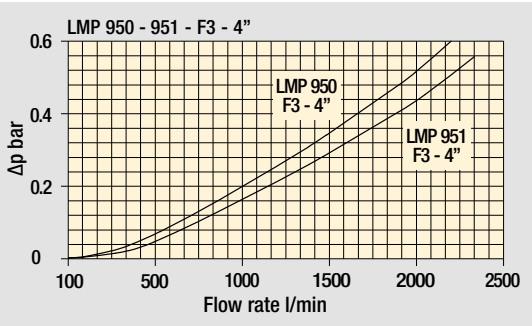

Bypass valve pressure drop

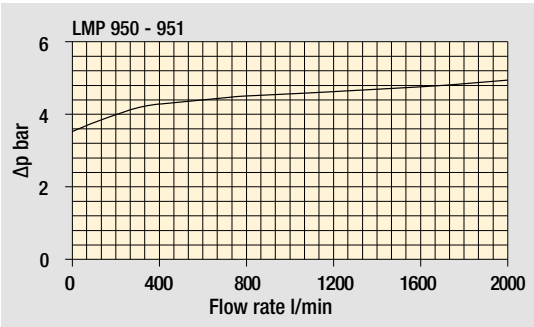

The curves are plotted using mineral oil with density of 0.86 kg/dm^3 in compliance with ISO 3968. Δp varies proportionally with density.

LMP 950-951

Designation & Ordering code

COMPLETE FILTER

Configuration example: LMP951 | 2 | B | A | F2 | A10 | N | P01

Series and size

LMP950 | **LMP951**

Length

2 | **3**

Bypass valve

S Without bypass
B 3.5 bar

Seals and treatments

A NBR
V FPM

Connections

F1 3” SAE 3000 psi/M
F2 3” SAE 3000 psi/UNC
F3 4” SAE 3000 psi/M
F4 4” SAE 3000 psi/UNC

Filtration rating (filter media)

A03 Inorganic microfiber 3 µm
A06 Inorganic microfiber 6 µm
A10 Inorganic microfiber 10 µm
A16 Inorganic microfiber 16 µm
A25 Inorganic microfiber 25 µm
M25 Wire mesh 25 µm
M60 Wire mesh 60 µm
M90 Wire mesh 90 µm

WA025 Water absorber inorganic microfiber 25 µm

Element Δp

N 20 bar

Execution

P01 MP Filtri standard
P02 With internal tube for reduced flow rate
Pxx Customized

FILTER ELEMENT

Configuration example: CU950 | 2 | A10 | A | N | P01

Element series and size

CU950

Element length

2 | **3**

Filtration rating (filter media)

A03 Inorganic microfiber 3 µm
A06 Inorganic microfiber 6 µm
A10 Inorganic microfiber 10 µm
A16 Inorganic microfiber 16 µm
A25 Inorganic microfiber 25 µm
M25 Wire mesh 25 µm
M60 Wire mesh 60 µm
M90 Wire mesh 90 µm

WA025 Water absorber inorganic microfiber 25 µm

Seals

A NBR
V FPM

Element Δp

N 20 bar

Execution

P01 MP Filtri standard
Pxx Customized

ACCESSORIES

Differential indicators		page
DEA	Electrical differential indicator	445
DEM	Electrical differential indicator	445-446
DLA	Electrical / visual differential indicator	446-447
DLE	Electrical / visual differential indicator	447
DTA	Electronic differential indicator	448
DVA	Visual differential indicator	448
DVM	Visual differential indicator	448

Additional features		page
T2	Plug	449
CFA	Retaining clamp	450

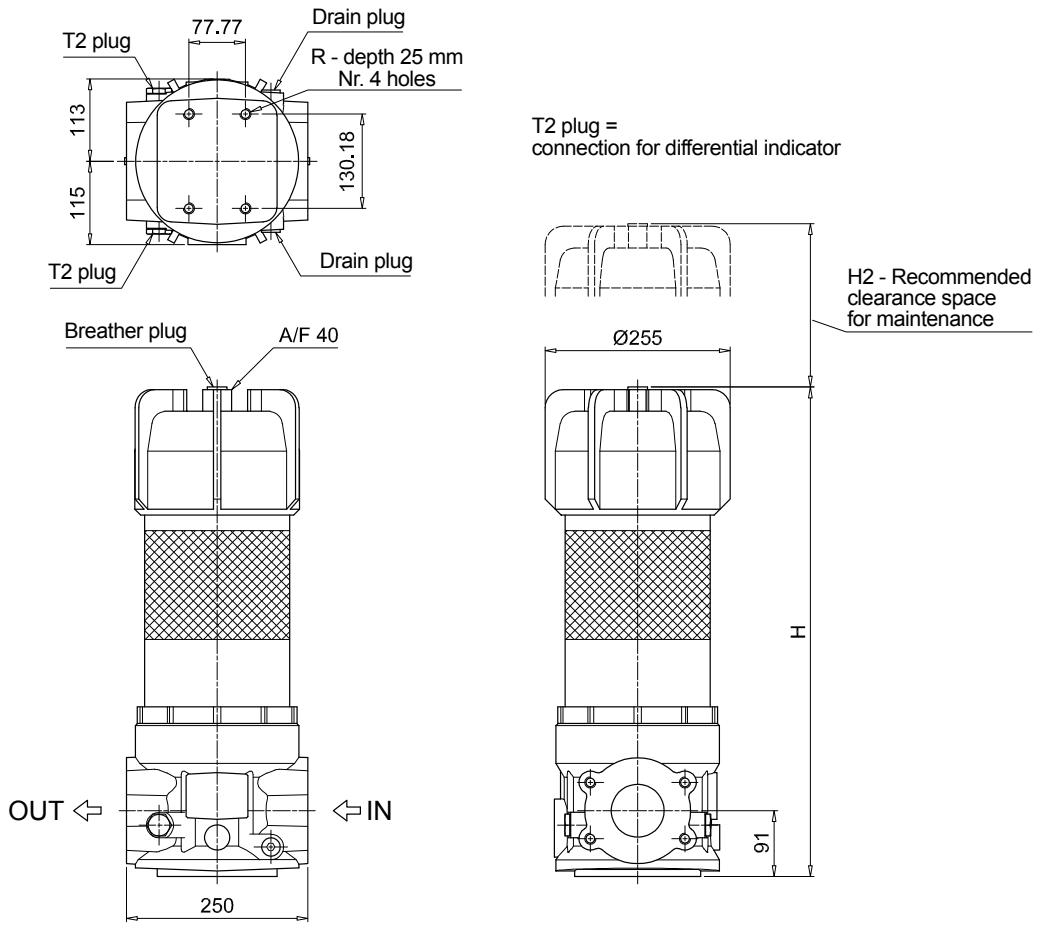

LMP950

Filter length	H [mm]	H2 [mm]
2	680	350
3	1230	900

Connections	R
F1 - F3	M16
F2 - F4	5/8" UNC

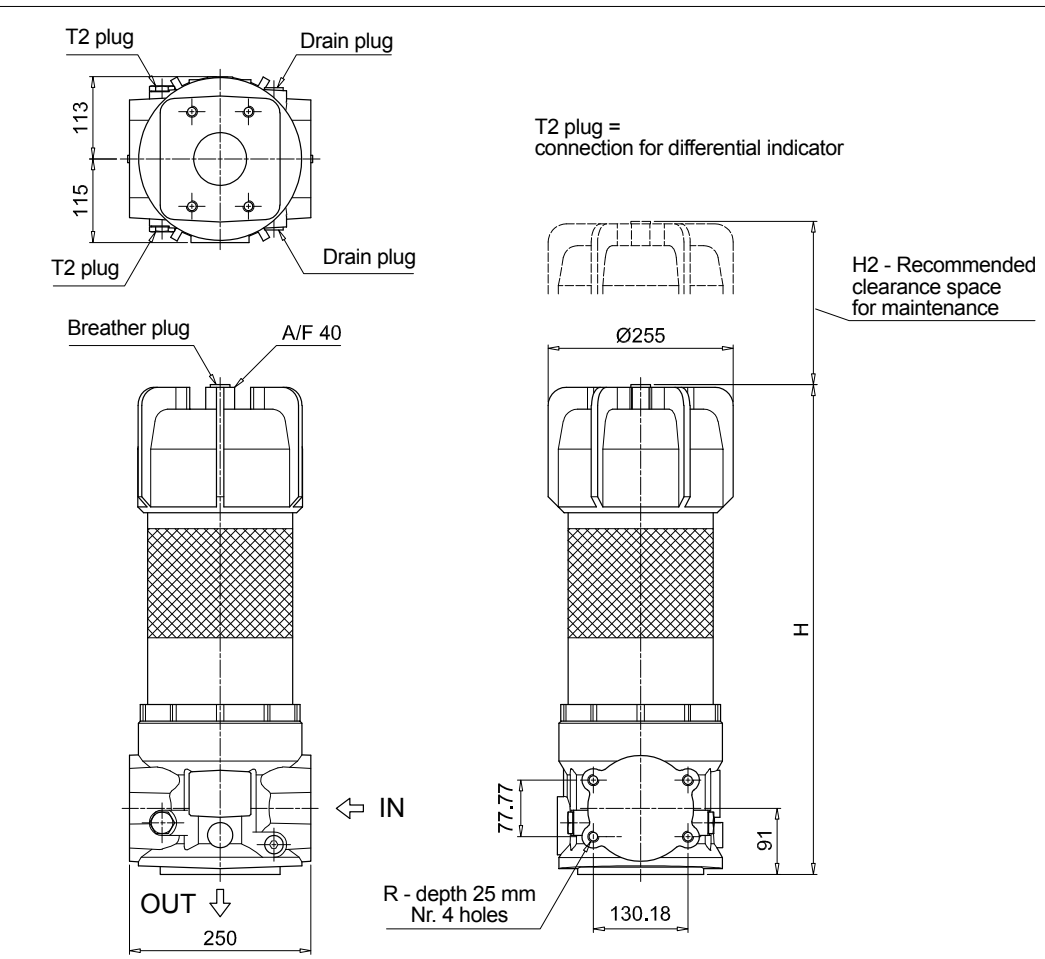

LMP951

Filter length	H [mm]	H2 [mm]
2	680	350
3	1230	900

Connections	R
F1 - F3	M16
F2 - F4	5/8" UNC

LMP 950-951 SPARE PARTS

Order number for spare parts

LMP 950 - 951

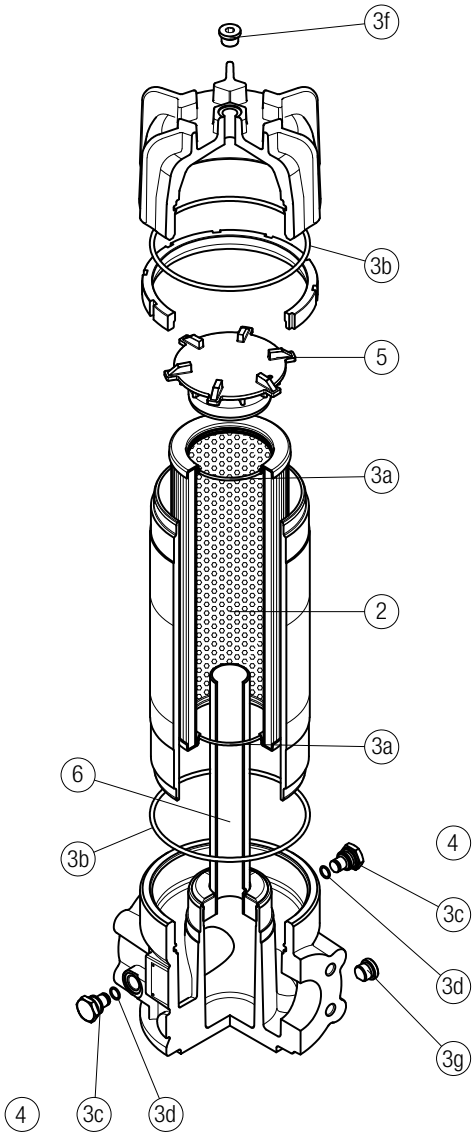

	Q.ty: 2 pcs.	Q.ty: 1 pc.		Q.ty: 2 pcs.		Q.ty: 1 pc.		Q.ty: 1 pc.	
Item:	2	3 (3a ÷ 3g)		4		5		6	
Filter series	**Filter element**	**Seal Kit code number NBR**	**FPM**	**Indicator connection plug NBR**	**FPM**	**Housing spigot no bypass**	**with bypass**	**Tube assembly length 2**	**length 3**
LMP 950-951 length 2-3	See order table	02050367	02050368	T2H	T2V	01044106	02001379	02025032	02025033

LMP 952-953-954 series

Maximum working pressure up to 2.5 MPa (25 bar) - Flow rate up to 4500 l/min

LMP 952-953-954 GENERAL INFORMATION

Description

Low & Medium Pressure filters

Maximum working pressure up to 2.5 MPa (25 bar)
Flow rate up to 4500 l/min

LMP952, LMP953 and LMP954 are ranges of low pressure filter with large filtration surface mainly suitable for lubrication, off-line filtration of the reservoirs and filtration equipment.
Multiple LMP950 filters are connected to a manifold to reduce the pressure drop caused by the filter media and to increase the life time of the filter element.
They are directly connected to the lines of the system through the hydraulic fittings.

Available features:

- 4" flanged connections, for a maximum flow rate of 4500 l/min
- Base-mounting design, for ease of the replacement of the filter element
- Fine filtration rating, to get a good cleanliness level into the system
- Water removal elements, to remove the free water from the hydraulic fluid. For further information, see the Contamination Management document and the dedicate leaflet.
- Bypass valve, to relieve excessive pressure drop across the filter media
- Vent ports, to avoid air trapped into the filter going into the system
- Drain ports, to remove the fluid from the housing prior the maintenance work
- Visual, electrical and electronic differential clogging indicators

Common applications:

- Off-line filtration of reservoirs
- Filtration systems

Technical data

Filter housing materials

- Head: Anodized Aluminium
- Housing: Anodized Aluminium
- Manifolds: Welded - Phosphatized Steel
- Bypass valve: Anodized Aluminium

Pressure

Test pressure: 3.5 MPa (35 bar)

Bypass valve

- Opening pressure 350 kPa (3.5 bar) ±10%
- Other opening pressures on request.

Δp element type

- Microfibre filter elements - series N: 20 bar
- Fluid flow through the filter element from OUT to IN

Number of filter elements

- LMP 952: 2 filter elements CU950-3
- LMP 953: 3 filter elements CU950-3
- LMP 954: 4 filter elements CU950-3

Seals

- Standard NBR series A
- Optional FPM series V

Temperature

From -25 °C to +110 °C

Connections

LMP 952-953-954:
In-line Inlet/Outlet

Note

LMP 952 - 953 - 954 filters
are provided for vertical mounting

Weights [kg] and volumes [dm³]

Filter series	Weights [kg]	Volumes [dm³]
	Length 3	Length 3
LMP 952	96	66
LMP 953	138	99
LMP 954	192	132

FILTER ASSEMBLY SIZING
Flow rates [l/min]

		Filter element design - N Series					
Filter series	Length	A03	A06	A10	A16	A25	M25 M60 M90
LMP 952	**3**	2172	2294	2766	3106	3256	3998
LMP 953	**3**	2842	2964	3403	3696	3820	4395
LMP 954	**3**	3259	3372	3770	4026	4133	4618

Maximum flow rate for a complete low and medium pressure filter with a pressure drop Δp = 0.7 bar.
The reference fluid has a kinematic viscosity of 30 mm^2/s (cSt) and a density of 0.86 kg/dm^3.
For different pressure drop or fluid viscosity we recommend to use our selection software available on www.mpfiltri.com.
You can also calculate the right size using the formulas present on the FILTER SIZING paragraph at the beginning of the full catalogue or at the beginning of the filter family brochure.
Please, contact our Sales Department for further additional information.

Hydraulic symbols

Filter series	Execution S - Execution B	Execution S - Execution B	Execution S - Execution B
LMP 952	•		
LMP 953		•	
LMP 954			•

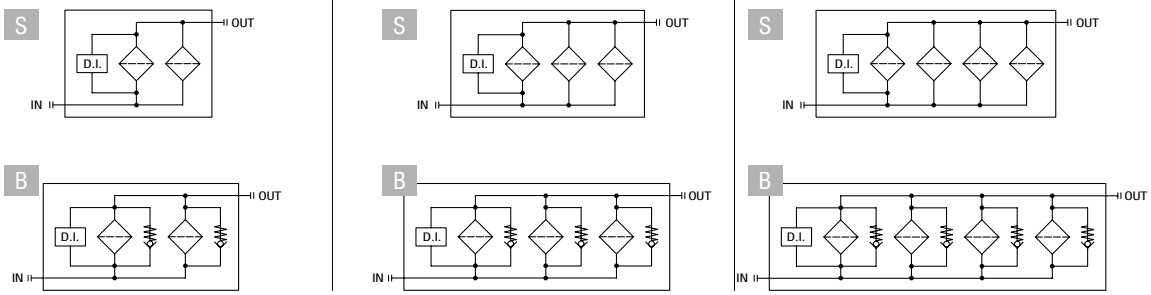

Pressure drop

Filter housings Δp pressure drop

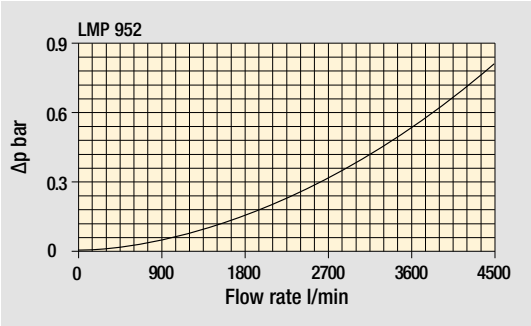

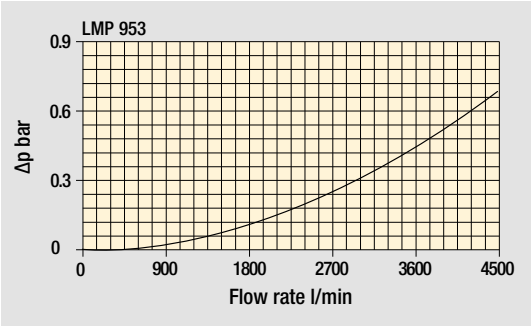

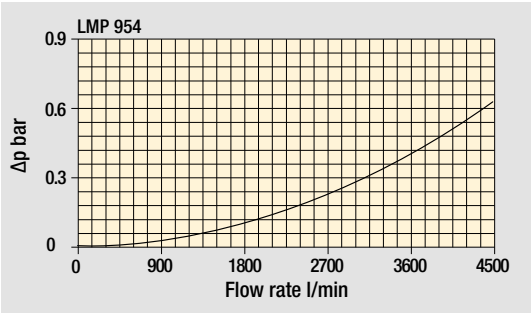

Pressure drop of filter complete with cartridge, oil viscosity 30 mm²/s (cSt)

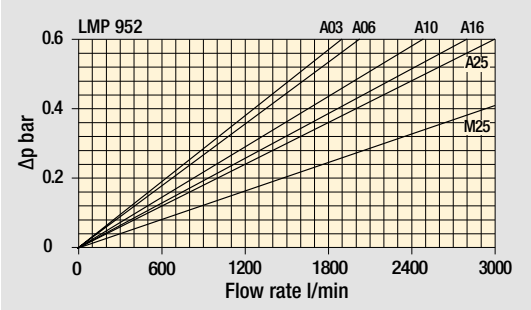

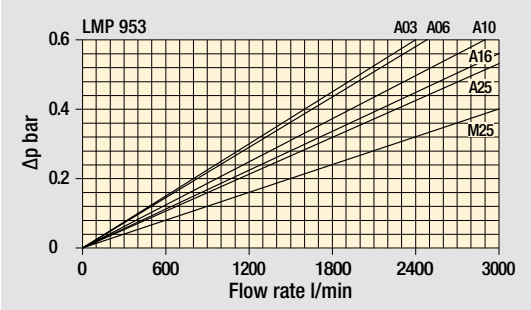

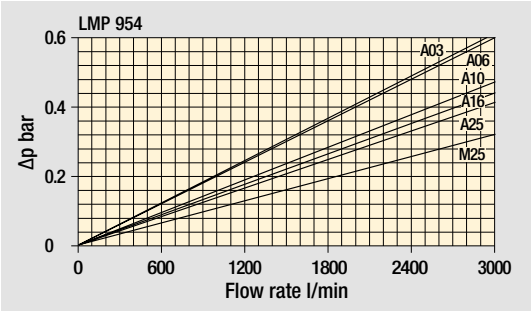

Bypass valve pressure drop

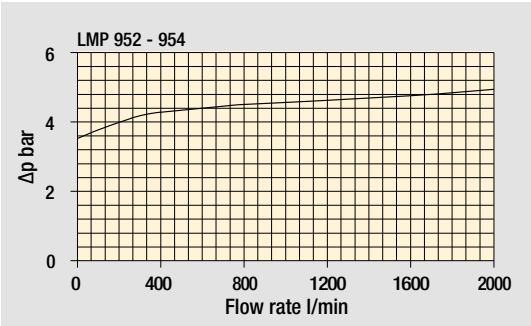

The curves are plotted using mineral oil with density of 0.86 kg/dm³ in compliance with ISO 3968. Δp varies proportionally with density.

Manifolds

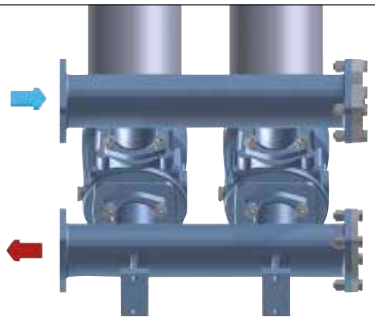

FA

Position of manifolds
IN - OUT connections

Focus on

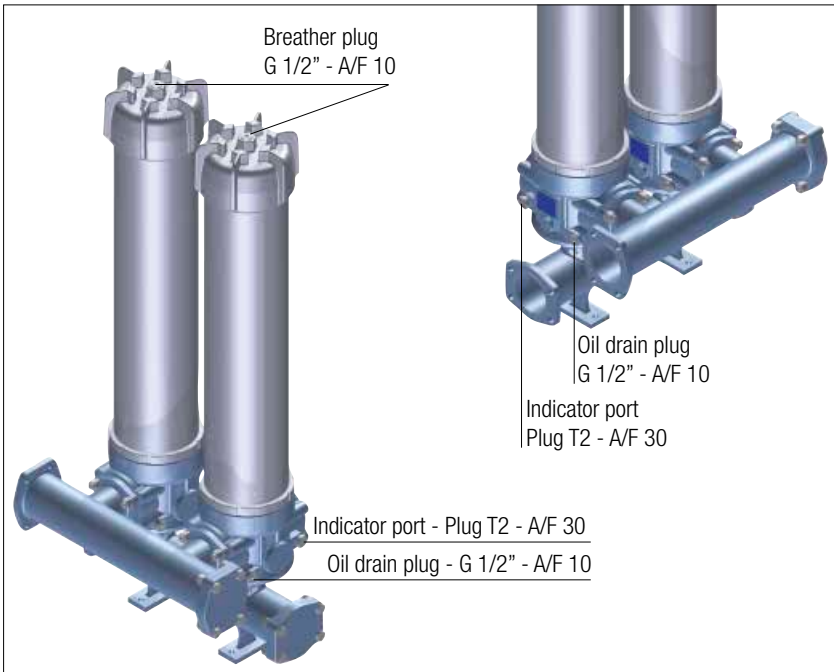

Execution P02

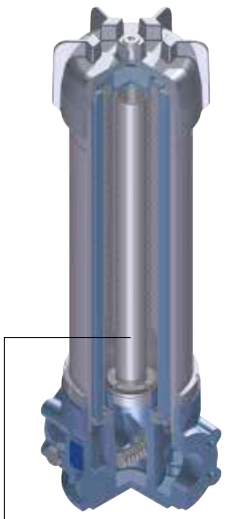

"Internal tube
for reduced flow rate"
is recommended for
flow rate values below:
LMP 952 - 300 l/min
LMP 953 - 450 l/min
LMP 954 - 600 l/min

The use of option P02
makes it easier to fill the
housing with the operating fluid.

CMV4 & CUV4 Flange options

Code	Thread	Materials
CMV4	**G 1 1/4"**	1 - 4" SAE flange 2 - O-R 4437 (FPM) for flange 3 - Plug G 1-1/4" 4 - O-R 3168 for plug (FPM) 5 - No. 4 Hex bolt screws UNI-EN 24017 M16 x 65-10.9 6 - No. 4 Spring washers UNI 1751-B 16 7 - No. 4 Nuts UNI 5587 - M16
CUV4	**SAE 20**	1 - 4" SAE flange 2 - O-R 4437 (FPM) for flange 3 - Plug SAE 20 1 5/8" - 12 UN 4 - 1147 O-R for plug (FPM) 5 - No. 4 Hex bolt screws 5/8" UNC x 2 1/2" 6 - No. 4 Spring washers UNI 1751-B 16 7 - No. 4 Nuts 5/8" UNC

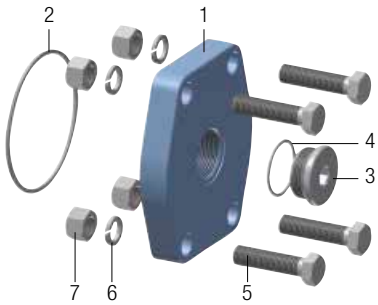

Oil drain plug
Flange with oil drain plug
for rapid discharge

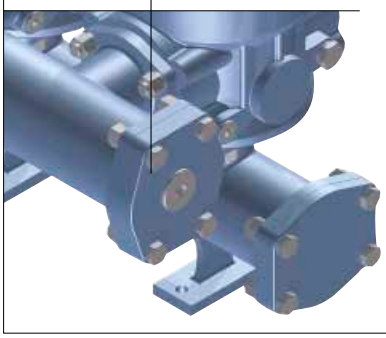

LMP 952-953-954

Designation & Ordering code

COMPLETE FILTER

Configuration example: LMP952 | 3 | B | A | FA | A10 | N | P01

Series and size

LMP952 | **LMP953** | **LMP954**

Length

3

Bypass valve

S Without bypass
B 3.5 bar

Seals and treatments

A NBR
V FPM

Connections

FA 4” SAE 3000 psi

Filtration rating (filter media)

A03 Inorganic microfiber 3 µm
A06 Inorganic microfiber 6 µm
A10 Inorganic microfiber 10 µm
A16 Inorganic microfiber 16 µm
A25 Inorganic microfiber 25 µm
M25 Wire mesh 25 µm
M60 Wire mesh 60 µm
M90 Wire mesh 90 µm
WA025 Water absorber inorganic microfiber 25 µm

Element Δp

N 20 bar

Execution

P01 MP Filtri standard
P02 With internal tube for reduced flow rate
Pxx Customized

FILTER ELEMENT

Configuration example: CU950 | 3 | A10 | A | N | P01

Element series and size

CU950

Element length

3

Filter series and size

LMP952 Nr. 2 filter elements
LMP953 Nr. 3 filter elements
LMP954 Nr. 4 filter elements

Filtration rating (filter media)

A03 Inorganic microfiber 3 µm
A06 Inorganic microfiber 6 µm
A10 Inorganic microfiber 10 µm
A16 Inorganic microfiber 16 µm
A25 Inorganic microfiber 25 µm
M25 Wire mesh 25 µm
M60 Wire mesh 60 µm
M90 Wire mesh 90 µm
WA025 Water absorber inorganic microfiber 25 µm

Seals

A NBR
V FPM

Element Δp

N 20 bar

Execution

P01 MP Filtri standard
Pxx Customized

ACCESSORIES

Differential indicators		page
DEA	Electrical differential indicator	445
DEM	Electrical differential indicator	445-446
DLA	Electrical / visual differential indicator	446-447
DLE	Electrical / visual differential indicator	447
DTA	Electronic differential indicator	448
DVA	Visual differential indicator	448
DVM	Visual differential indicator	448

Additional features		page
T2	Plug	449

LMP952

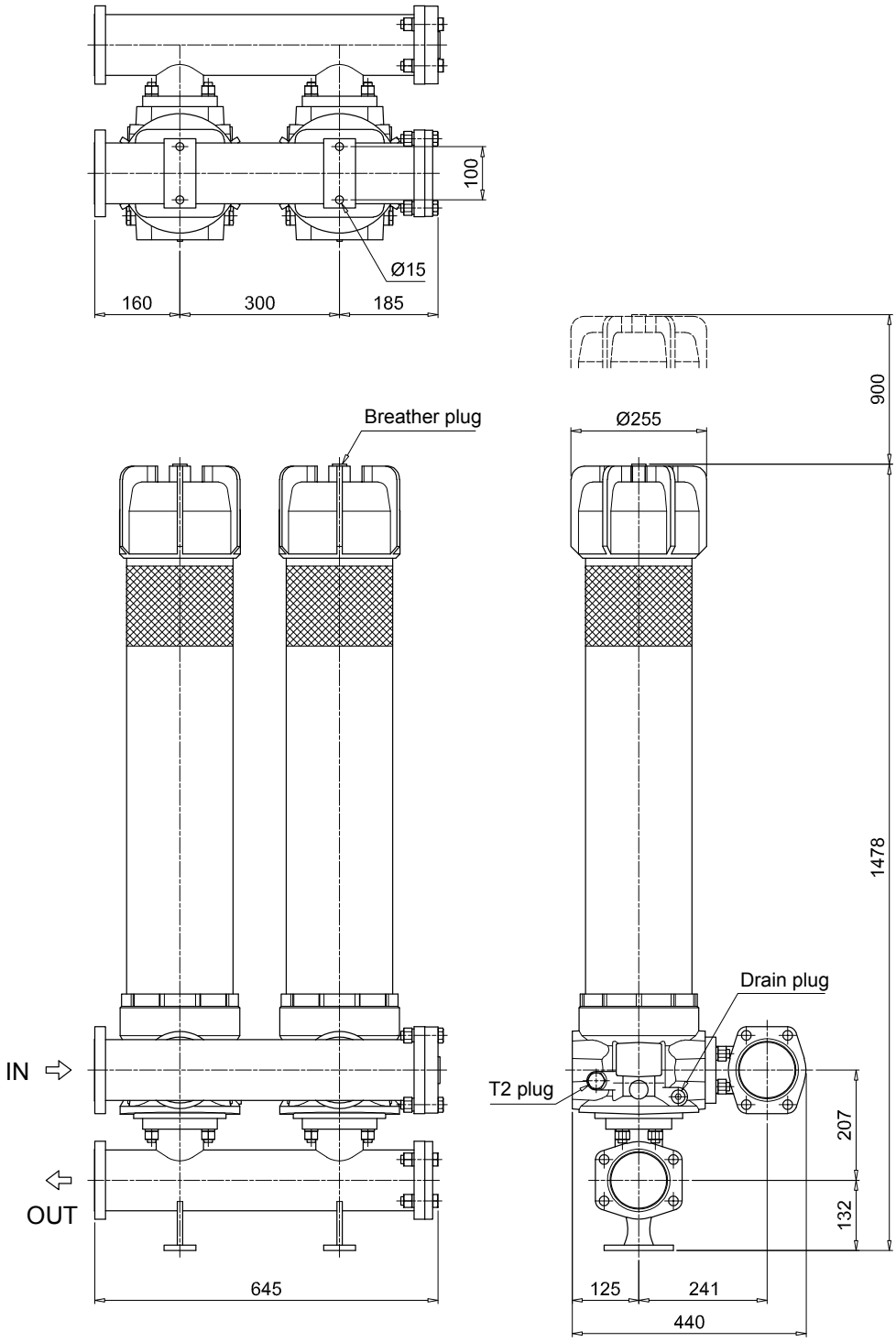

T2 plug =
connection for differential indicator

LMP 952-953-954

Dimensions

LMP953

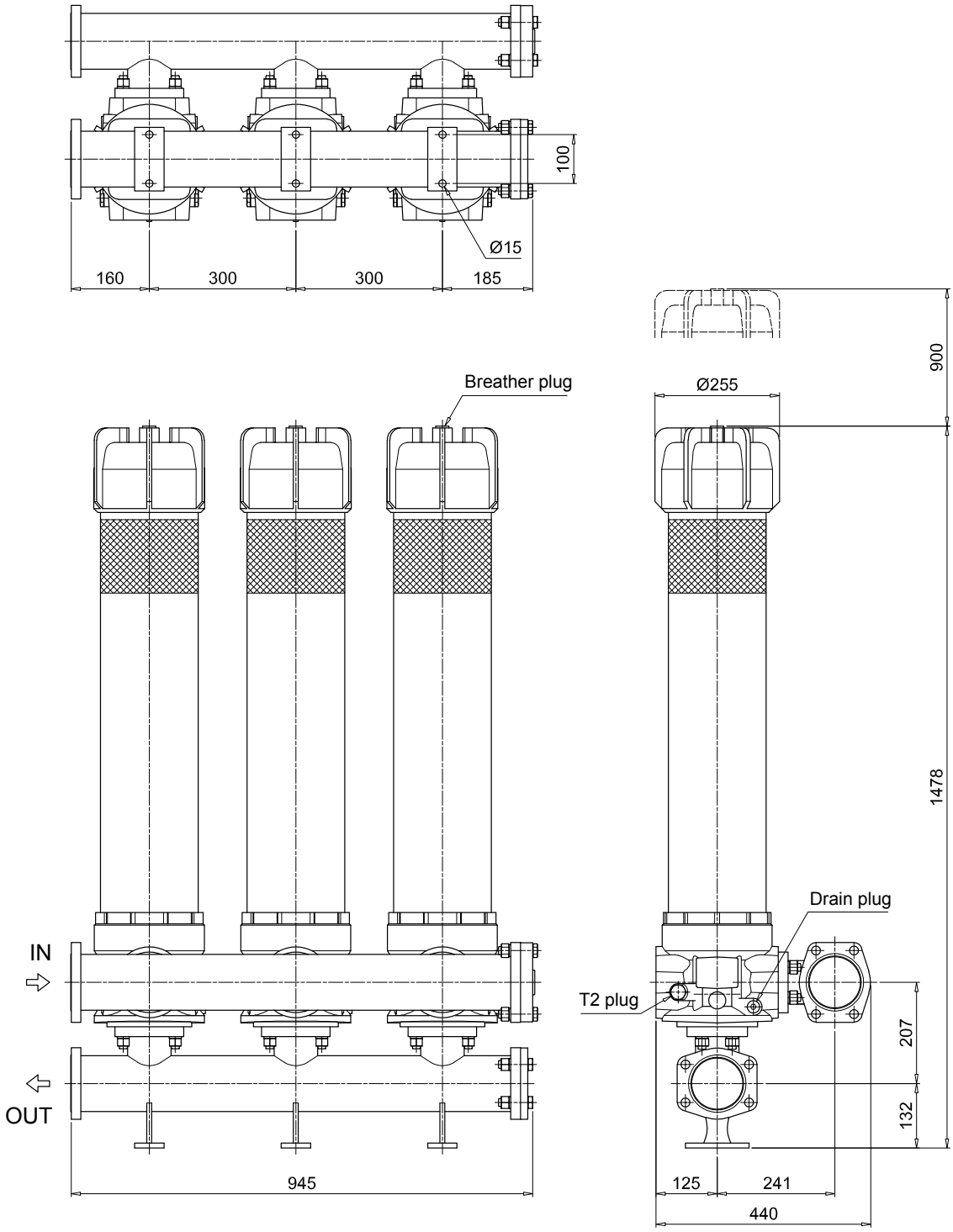

T2 plug =
connection for differential indicator

LMP954

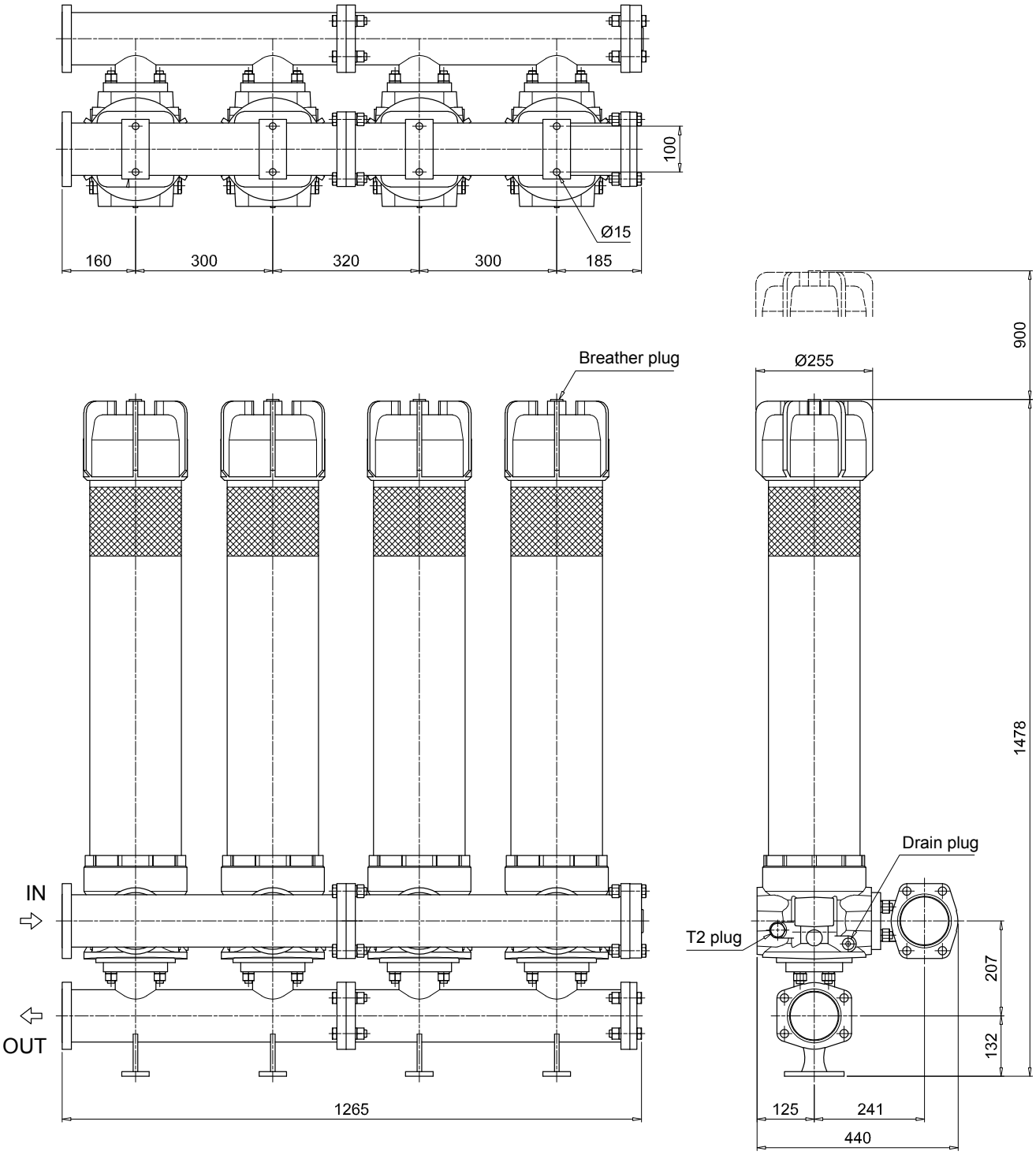

T2 plug =
connection for differential indicator

LMP 952-953-954 SPARE PARTS

Order number for spare parts

LMP 952 - 953 - 954

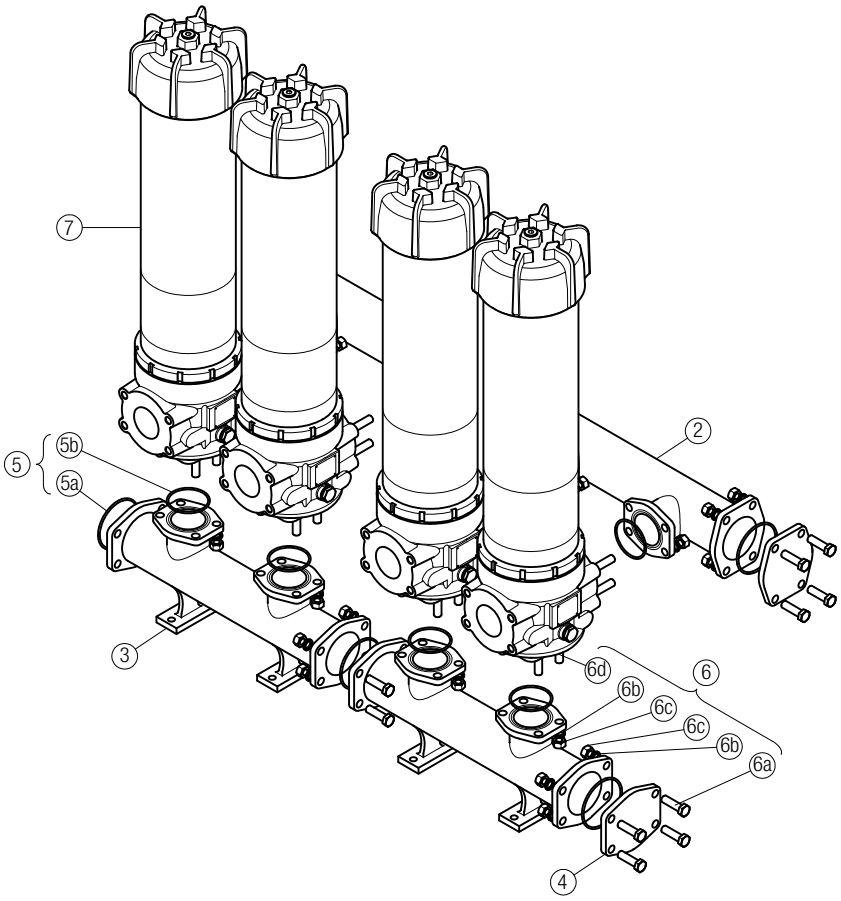

Item 7:
for complete filter code and spare parts, see
LMP 950 - 951 series chapter

Quantity:
- filter spare parts:
LMP 952 - 2 pcs.
LMP 953 - 3 pcs.
LMP 954 - 4 pcs.

- filter seal kit:
LMP 952 - 2 pcs.
LMP 953 - 3 pcs.
LMP 954 - 4 pcs.

Item:	2		3	4		5 (5a-5b)			6 (6a ÷ 6d)		7	
Filter series	Manifold			4" SAE 3000 psi plugged flange		Manifolds seal kit			Threaded fasteners kit		Filter	
	Q.ty	IN	OUT	Q.ty		Q.ty	NBR	FPM	Q.ty		Q.ty	
LMP 952	1 pc.	01039270	01039271	2 pcs.	01042012	1 pc.	02050404	02050405	1 pc.	02049051	2 pcs.	LMP9513xxF1xxxNP0x
LMP 953	1 pc.	01039337	01039338	2 pcs.		1 pc.	02050404	02050405	1 pc.	02049052	3 pcs.	
LMP 954	2 pcs.	01039270	01039271	2 pcs.		1 pc.	02050406	02050407	1 pc.	02049053	4 pcs.	

LMD 211 series

Maximum working pressure up to 6 MPa (60 bar) - Flow rate up to 200 l/min

LMD 211 GENERAL INFORMATION

Description

Low & Medium Pressure filters

Duplex
Maximum working pressure up to 6 MPa (60 bar)
Flow rate up to 200 l/min

LMD211 is a range of versatile low pressure duplex filter with integrated changeover function to allow the filter element replacement without the system shut-down.
They are directly connected to the lines of the system through the hydraulic fittings.

Available features:
- Female threaded connections up to 1 1/2" and flanged connections up to 1 1/2", for a maximum flow rate of 200 l/min
- Fine filtration rating, to get a good cleanliness level into the system
- Water removal elements, to remove the free water from the hydraulic fluid. For further information, see the Contamination Management document and the dedicate leaflet.
- Balancing valve integrated in the changeover lever, to equalize the housing pressure before the switch
- Bypass valve, to relieve excessive pressure drop across the filter media
- Vent ports, to avoid air trapped into the filter going into the system
- Drain ports, to remove the fluid from the housing prior the maintenance work
- Optional sampling ports, to get samples of fluid or to connect additional instrument to the system
- Visual, electrical and electronic differential clogging indicators

Common applications:
- Systems where shut-down causes high costs
- Systems where shut-down causes safety issues

Technical data

Filter housing materials
- Head: Aluminium
- Bowl: Cataphoretic Painted Steel
- Bypass valve: AISI 304 - Nylon

Pressure
- Test pressure: 9 MPa (90 bar)
- Burst pressure: 21 MPa (210 bar)
- Pulse pressure fatigue test: 1 000 000 cycles with pressure from 0 to 6 MPa (60 bar)

Bypass valve
- Opening pressure 350 kPa (3.5 bar) ±10%
- Other opening pressures on request.

Δp element type
- Microfibre filter elements - series N: 20 bar
- Fluid flow through the filter element from OUT to IN

Seals
- Standard NBR series A
- Optional FPM series V

Temperature
From -25° C to +110° C

Connections
Inlet/Outlet In-Line

Note
LMD 211 filters are provided for vertical mounting

Weights [kg] and volumes [dm³]

Filter series	Weights [kg]				Volumes [dm³]			
	Length	1	2	3	Length	1	2	3
LMD 211		9.5	11.2	12.8		4.1	4.6	5.3

FILTER ASSEMBLY SIZING
Flow rates [l/min]

		Filter element design - N Series									
Filter series	Length	A03	A06	A10	A16	A25	M25	M60	M90	P10	P25
	1	90	95	140	147	156	191	192	192	177	181
LMD 211	2	113	121	158	162	173	192	192	193	181	183
	3	131	146	166	169	177	193	194	194	184	187

Maximum flow rate for a complete low and medium pressure filter with a pressure drop Δp = 0.7 bar.
The reference fluid has a kinematic viscosity of 30 mm^2/s (cSt) and a density of 0.86 kg/dm^3.
For different pressure drop or fluid viscosity we recommend to use our selection software available on www.mpfiltri.com.
You can also calculate the right size using the formulas present on the FILTER SIZING paragraph at the beginning of the full catalogue or at the beginning of the filter family brochure.
Please, contact our Sales Department for further additional information.

Hydraulic symbols

Filter series	Style S	Style B
LMD 211	•	•

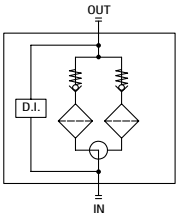

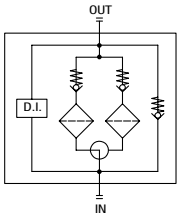

Pressure drop

Filter housings Δp pressure drop

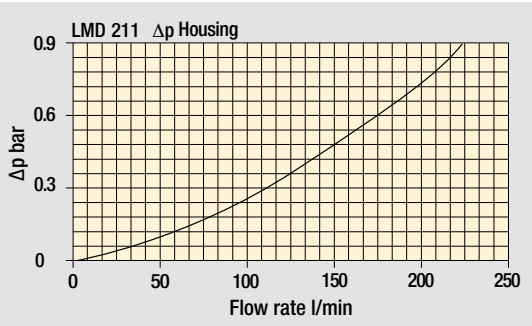

Bypass valve pressure drop

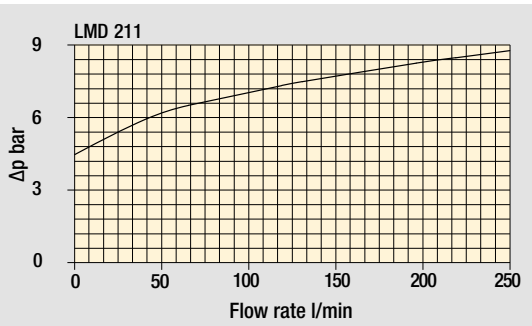

The curves are plotted using mineral oil with density of 0.86 kg/dm^3 in compliance with ISO 3968. Δp varies proportionally with density.

LMD 211

Designation & Ordering code

COMPLETE FILTER

Configuration example: LMD211 | 3 | B | A | C | 6 | A10 | N | P01

Series and size

LMD211

Length

1 | **2** | **3**

Bypass valve

S Without bypass

B 3.5 bar

Seals and treatments	Filtration rating Axx	Mxx	Pxx
A NBR	•	•	•
V FPM	•	•	•
W NBR compatible with fluids HFA-HFB-HFC	•	•	

Connections

C G 1 1/2"

F 1 1/2" NPT

I SAE 24 - 1 7/8" - 12 UN

L 1 1/2" SAE 3000 psi/M + G 1 1/4"

M 1 1/2" SAE 3000 psi/UNC + 1 1/4" NPT

N 1 1/2" SAE 3000 psi/UNC + SAE 20 - 1 5/8" UN

Connection for differential indicator

6 With plugged connection

Filtration rating (filter media)

A03 Inorganic microfiber 3 µm

A06 Inorganic microfiber 6 µm

A10 Inorganic microfiber 10 µm

A16 Inorganic microfiber 16 µm

A25 Inorganic microfiber 25 µm

M25 Wire mesh 25 µm

M60 Wire mesh 60 µm

M90 Wire mesh 90 µm

P10 Resin impregnated paper 10 µm

P25 Resin impregnated paper 25 µm

WA025 Water absorber inorganic microfiber 25 µm

Element Δp

N 20 bar

Execution

P01 MP Filtri standard

Pxx Customized

FILTER ELEMENT

Configuration example: CU210 | 3 | A10 | A | N | P01

Element series and size

CU210

Element length

1 | **2** | **3**

Filtration rating (filter media)

A03 Inorganic microfiber 3 µm

A06 Inorganic microfiber 6 µm

A10 Inorganic microfiber 10 µm

A16 Inorganic microfiber 16 µm

A25 Inorganic microfiber 25 µm

M25 Wire mesh 25 µm

M60 Wire mesh 60 µm

M90 Wire mesh 90 µm

P10 Resin impregnated paper 10 µm

P25 Resin impregnated paper 25 µm

WA025 Water absorber inorganic microfiber 25 µm

Seals	Filtration rating Axx	Mxx	Pxx
A NBR	•	•	•
V FPM	•	•	•
W NBR compatible with fluids HFA-HFB-HFC	•	•	

Element Δp

N 20 bar

Execution

P01 MP Filtri standard

Pxx Customized

ACCESSORIES

Differential indicators		page
DEA	Electrical differential indicator	445
DEM	Electrical differential indicator	445-446
DLA	Electrical / visual differential indicator	446-447
DLE	Electrical / visual differential indicator	447
DTA	Electronic differential indicator	448
DVA	Visual differential indicator	448
DVM	Visual differential indicator	448

Additional features		page
T2	Plug	449

LMD211	
Filter length	**H [mm]**
1	383
2	513
3	651

Connections	R
C	M10
F - I	3/8" UNC
L	M10
M - N	3/8" UNC

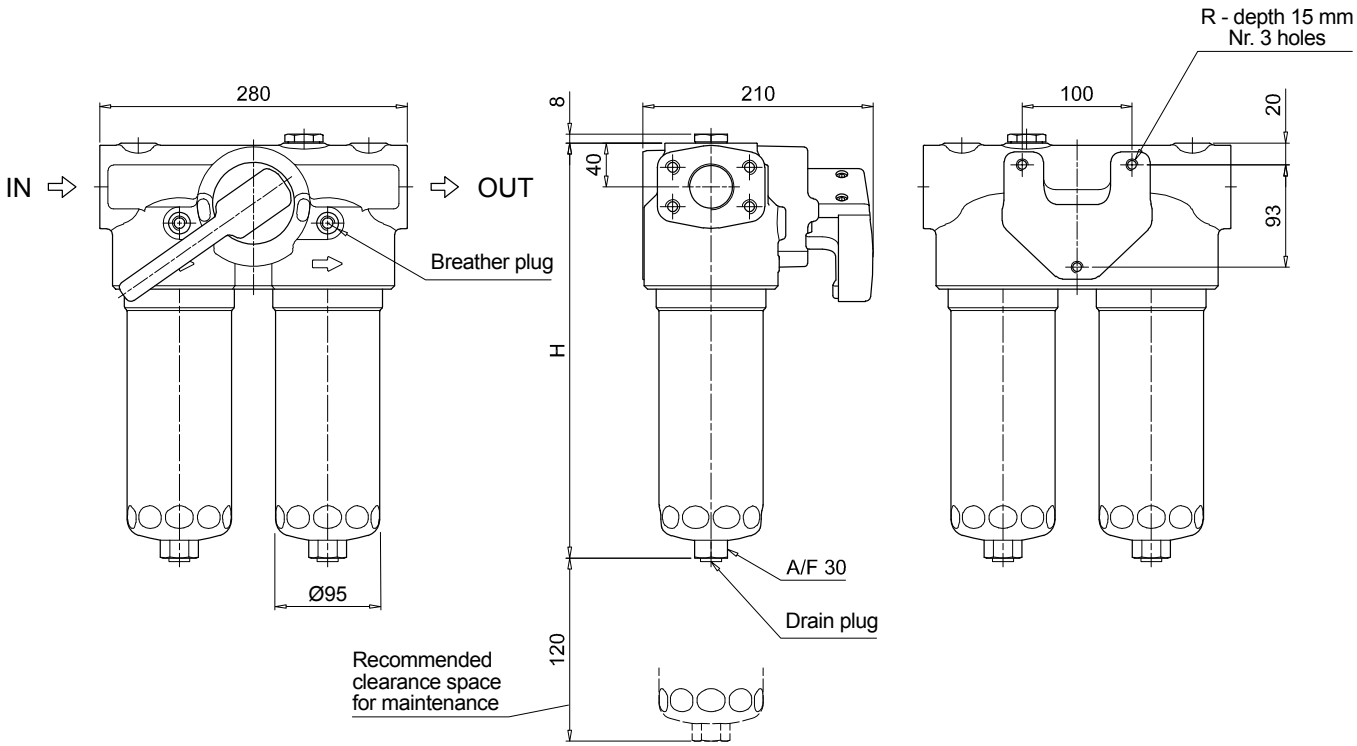

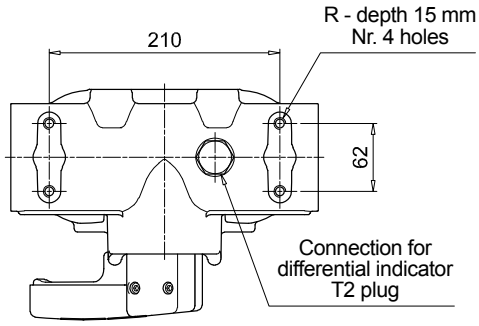

LMD 211 SPARE PARTS

Order number for spare parts

LMD 211

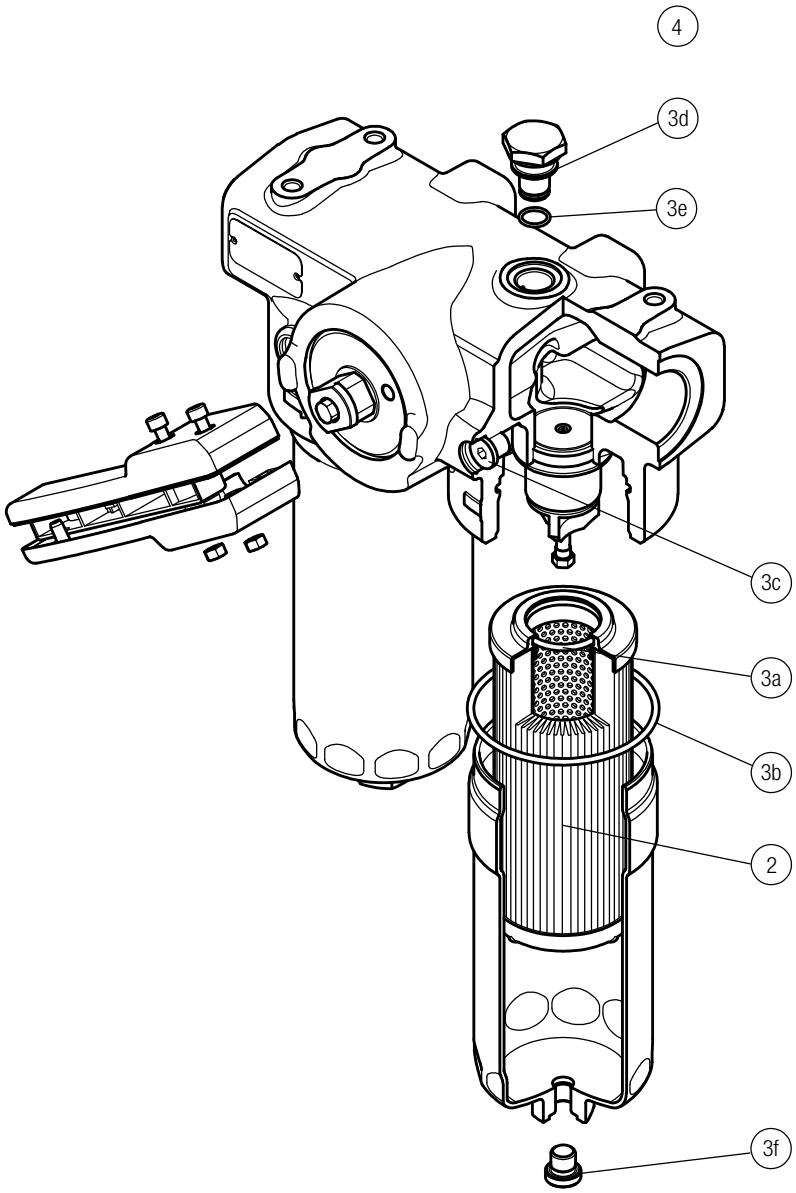

	Q.ty: 1 pc.	Q.ty: 1 pc.		Q.ty: 2 pcs.	
Item:	2	3 (3a ÷ 3f)		4	
Filter series	**Filter element**	**Seal Kit code number NBR**	**FPM**	**Indicator connection plug NBR**	**FPM**
LDD	See order table	02050671	02050672	T2H	T2V

LMD 400-401 & 431 series

Maximum working pressure up to 1.6 MPa (16 bar) - Flow rate up to 600 l/min

Description

Low & Medium Pressure filters

Duplex
Maximum working pressure up to 1.6 MPa (16 bar)
Flow rate up to 600 l/min

LMD400 is a range of versatile low pressure duplex filter with integrated changeover function to allow the filter element replacement without the system shut-down.
They are directly connected to the lines of the system through the hydraulic fittings.

Available features:
- 2 1/2" flanged connections, for a maximum flow rate of 600 l/min
- LMD400: In-line connections
- LMD401: In-line connections with compact design
- LMD431: In-line connections with compact design and base mounting
- Base-mounting design also available, for ease of the replacement of the filter element
- Fine filtration rating, to get a good cleanliness level into the system
- Water removal elements, to remove the free water from the hydraulic fluid. For further information, see the Contamination Management document and the dedicate leaflet.
- Balancing valve, to equalize the housing pressure before the switch
- Bypass valve, to relieve excessive pressure drop across the filter media
- Vent ports, to avoid air trapped into the filter going into the system
- Drain ports, to remove the fluid from the housing prior the maintenance work
- Visual, electrical and electronic differential clogging indicators

Common applications:
- Systems where shut-down causes high costs
- Systems where shut-down causes safety issues

Technical data

Filter housing materials
- Head: Anodized Aluminium
- Housing: Anodized Aluminium
- Manifolds: Steel - Painted black
- Bypass valve: Steel
- 3-way ball valve: Steel housings - Stainless Steel ball
- Valve: Phosphatized Steel - Stainless Steel

Pressure
Test pressure: 2.5 MPa (25 bar)

Bypass valve
- Opening pressure 350 kPa (3.5 bar) ±10%
- Other opening pressures on request.

Δp element type
- Microfibre filter elements - series N - W: 20 bar
- Fluid flow through the filter element from OUT to IN

Seals
FPM series V

Temperature
From -25° C to +110° C

Connections
- LMD 400-401: In-line Inlet/Outlet
- LMD 401: Same side
- LMD 400-401-431: In-Line

Note
LMP 400 - 401 - 431 filters are provided for vertical mounting

Weights [kg] and volumes [dm³]

Filter series	Weights [kg]			Volumes [dm³]		
	Length 4	5	6	Length 4	5	6
LMD 400 - 401	60	65	72	20	28	33
LMD 431	-	68	78	-	28	33

FILTER ASSEMBLY SIZING
Flow rates [l/min]

Filter series	Length	Filter element design - N Series							
		A03	A06	A10	A16	A25	M25 M60 M90	P10	P25
LMD 400 - 401	4	308	349	453	474	530	628	547	567
	5	395	427	509	547	589	637	577	592
	6	429	483	558	568	597	639	583	597
LMD 431	5	395	427	509	547	589	637	577	592
	6	429	483	558	568	597	639	583	597

Maximum flow rate for a complete low and medium pressure filter with a pressure drop Δp = 0.7 bar.
The reference fluid has a kinematic viscosity of 30 mm^2/s (cSt) and a density of 0.86 kg/dm^3.
For different pressure drop or fluid viscosity we recommend to use our selection software available on www.mpfiltri.com.
You can also calculate the right size using the formulas present on the FILTER SIZING paragraph at the beginning of the full catalogue or at the beginning of the filter family brochure.
Please, contact our Sales Department for further additional information.

Hydraulic symbols

Filter series	Execution S	Execution B
LMD 400 - 401	•	•
LMD 431	•	•

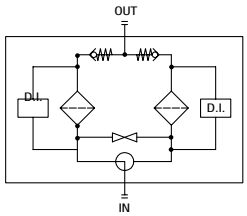

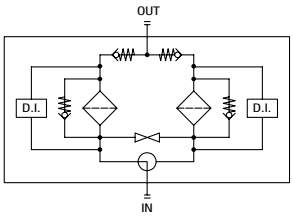

Pressure drop
Filter housings Δp pressure drop

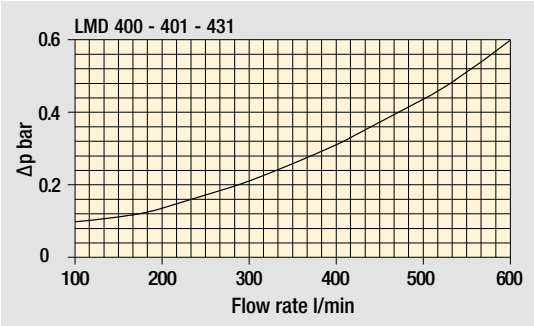

Bypass valve pressure drop

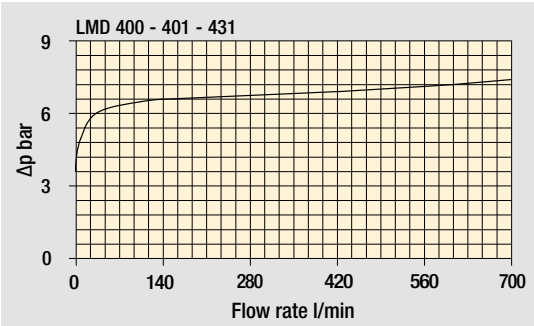

The curves are plotted using mineral oil with density of 0.86 kg/dm^3 in compliance with ISO 3968. Δp varies proportionally with density.

Focus on

A	Breather plug G 3/8” - A/F 8
B	Indicator port Plug T2 - A/F 30
C	Compensation valve
D	Oil drain plug G 3/8” - A/F 8

LMP 400 - 401 & 431
Fit one differential indicator for individual filter assembly.

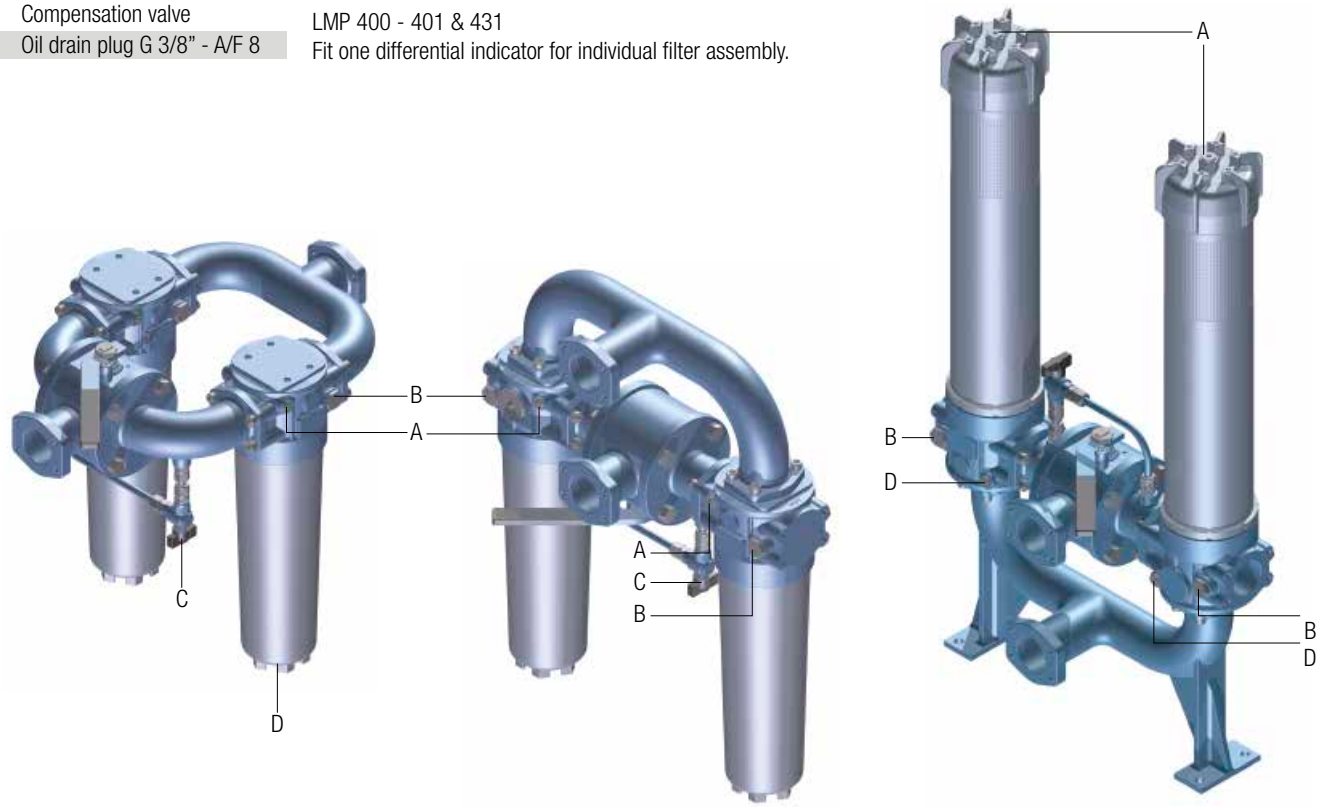

LMD 431: Execution P02

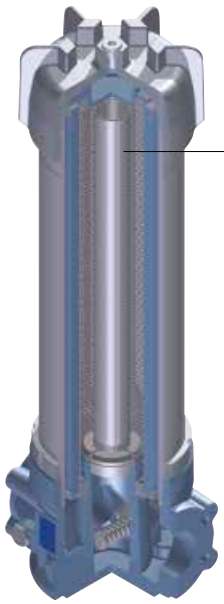

“Internal tube for reduced flow rate” is recommended for flow rate values below 150 l/min.

The use of option P02 makes it easier to fill the housing with the operating fluid.

LMD 400-401

Designation & Ordering code

COMPLETE FILTER

Configuration example: LMD401 | 4 | B | V | F1 | A10 | N | P01

Series and size

LMD400 | **LMD401**

Length

4 | **5** | **6**

Bypass valve

S Without bypass

B 3.5 bar

Seals and treatments	Filtration rating Axx	Mxx	Pxx
V FPM	•	•	•

Connections	LMD400	LMD401
F1 2 1/2" SAE 3000 psi/M	•	•
F2 2 1/2" SAE 3000 psi/UNC	•	•
F3 2 1/2" SAE 3000 psi/M, In-line connections		•
F4 2 1/2" SAE 3000 psi/UNC, In-line connections		•

Filtration rating (filter media)

A03 Inorganic microfiber 3 µm	**M25** Wire mesh 25 µm
A06 Inorganic microfiber 6 µm	**M60** Wire mesh 60 µm
A10 Inorganic microfiber 10 µm	**M90** Wire mesh 90 µm
A16 Inorganic microfiber 16 µm	**P10** Resin impregnated paper 10 µm
A25 Inorganic microfiber 25 µm	**P25** Resin impregnated paper 25 µm

WA025 Water absorber inorganic microfiber 25 µm

Element Δp

N 20 bar

Execution	Filter length 4	5	6
P01 MP Filtri standard	•	•	•
P02 Maintenance from the bottom of the housing		•	•
Pxx Customized			

FILTER ELEMENT

Configuration example: CU400 | 4 | A10 | V | N | P01

Element series and size

CU400

Element length

4 | **5** | **6**

Filtration rating (filter media)

A03 Inorganic microfiber 3 µm	**M25** Wire mesh 25 µm
A06 Inorganic microfiber 6 µm	**M60** Wire mesh 60 µm
A10 Inorganic microfiber 10 µm	**M90** Wire mesh 90 µm
A16 Inorganic microfiber 16 µm	**P10** Resin impregnated paper 10 µm
A25 Inorganic microfiber 25 µm	**P25** Resin impregnated paper 25 µm

WA025 Water absorber inorganic microfiber 25 µm

Seals	Filtration rating Axx	Mxx	Pxx
V FPM	•	•	•

Element Δp

N 20 bar

Execution

P01 MP Filtri standard

Pxx Customized

ACCESSORIES

Differential indicators	page
DEA Electrical differential indicator	445
DEM Electrical differential indicator	445-446
DLA Electrical / visual differential indicator	446-447
DLE Electrical / visual differential indicator	447
DTA Electronic differential indicator	448
DVA Visual differential indicator	448
DVM Visual differential indicator	448

Additional features	page
T2 Plug	449

LMD400	
Length 4	
Connections	**R**
F1	M12
F2	1/2" UNC
F3	M12
F4	1/2" UNC

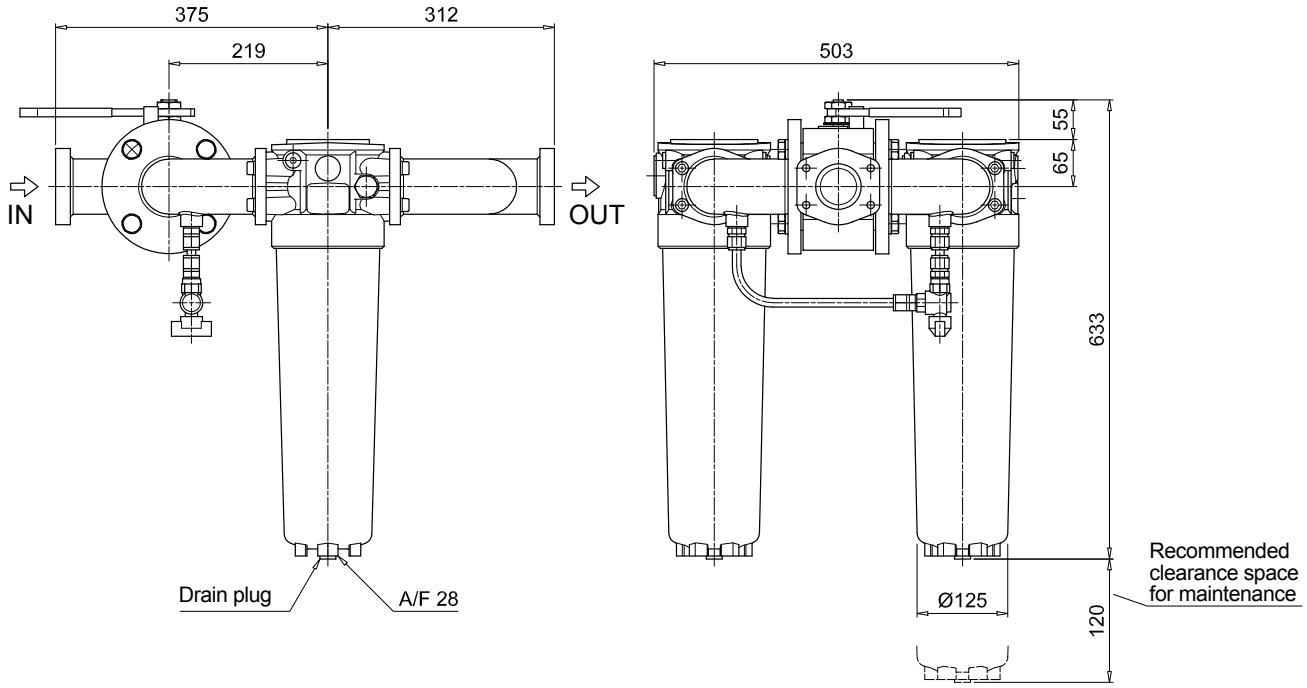

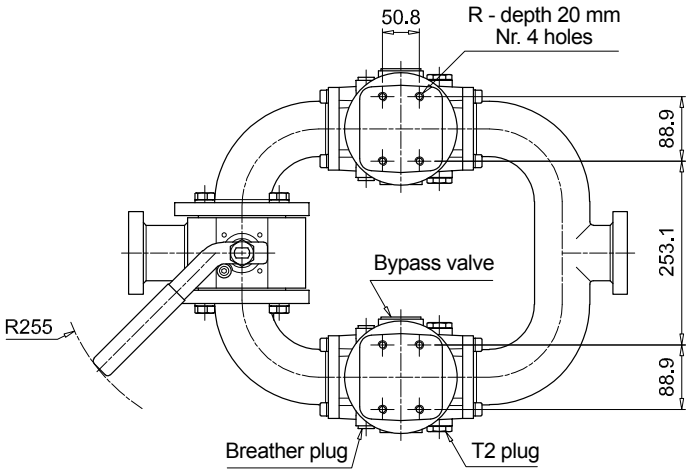

T2 plug =
Connection for differential indicator

LMD 400-401

Dimensions

LMD400			
Length 5 - 6			
Filter length	H [mm]	H2 [mm] Execution P01	H2 [mm] Execution P02
5	883	120	660
6	1213	120	690

Connections	R
F1	M12
F2	1/2" UNC
F3	M12
F4	1/2" UNC

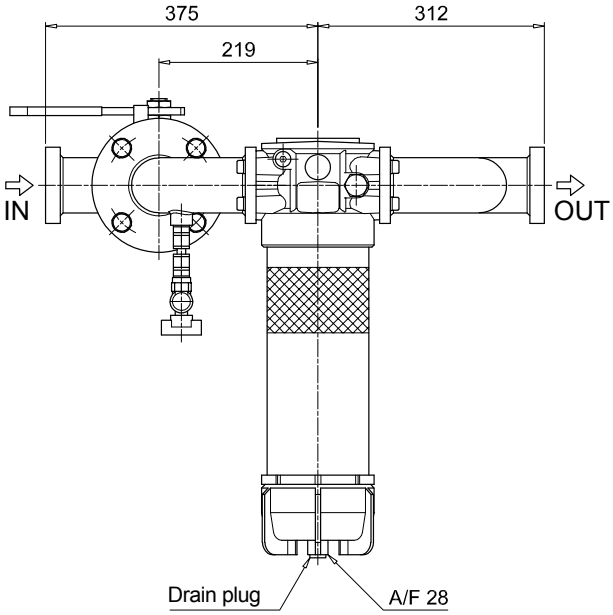

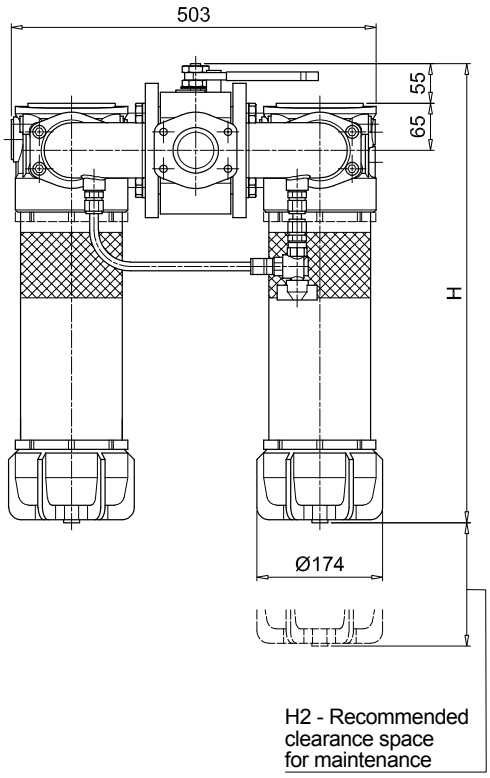

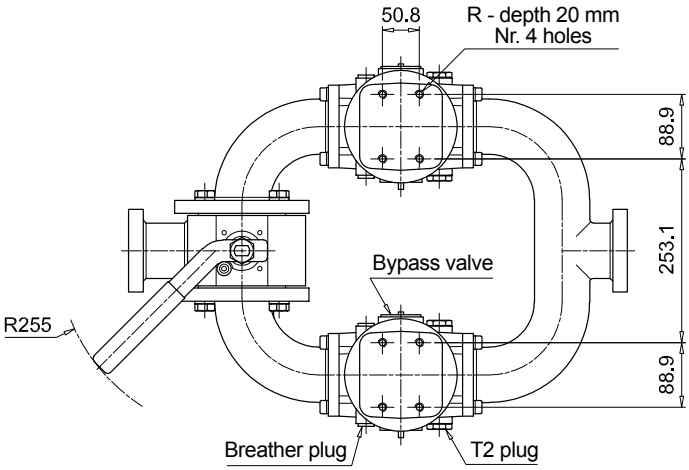

T2 plug =
Connection for differential indicator

LMD401	
Length 4	
Connections	**R**
F1	M12
F2	1/2" UNC
F3	M12
F4	1/2" UNC

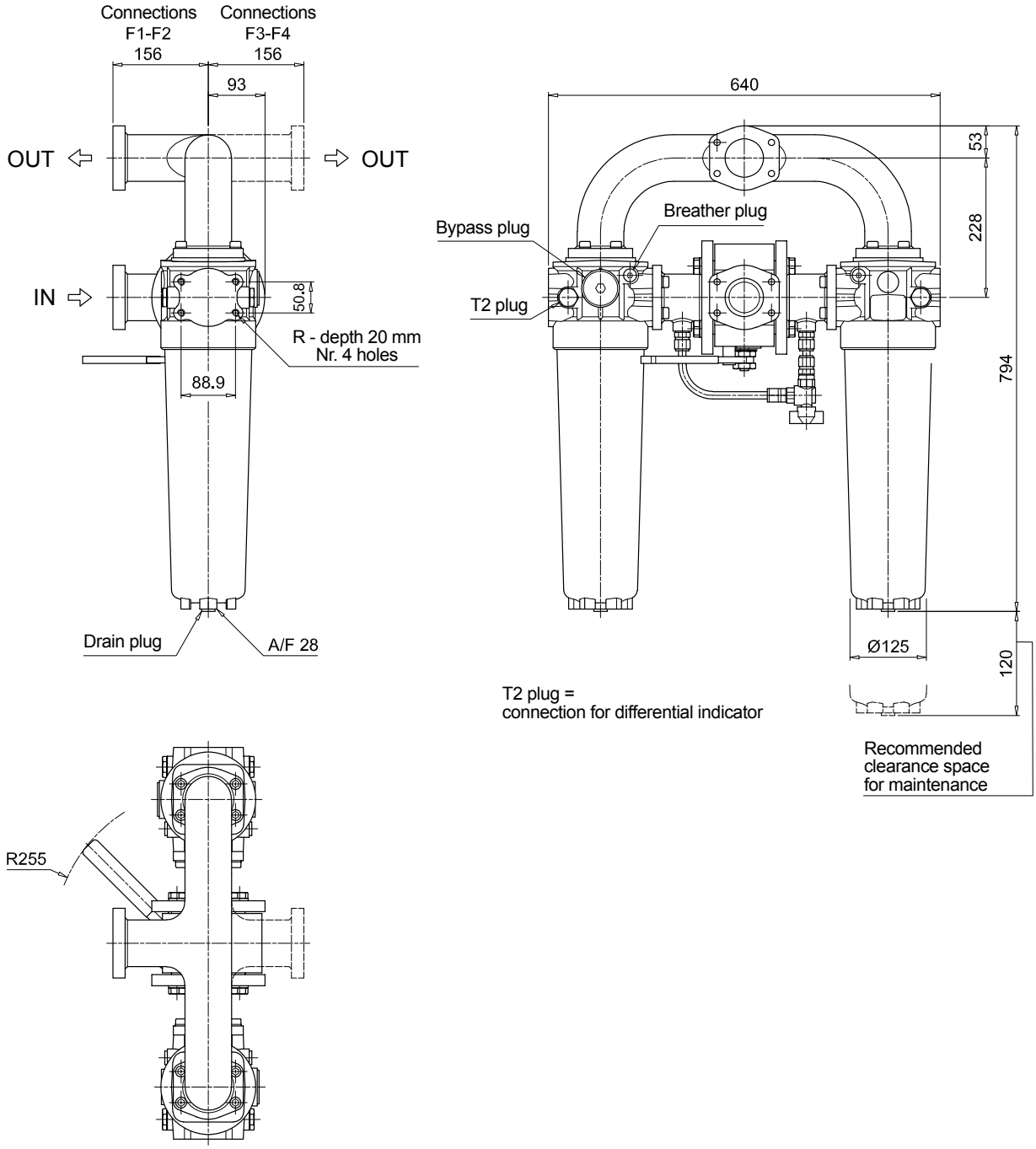

LMD 400-401

Dimensions

LMD401			
Length 5 - 6			
Filter length	H [mm]	H2 [mm] Execution P01	H2 [mm] Execution P02
5	1044	120	660
6	1374	120	690

Connections	R
F1	M12
F2	1/2" UNC
F3	M12
F4	1/2" UNC

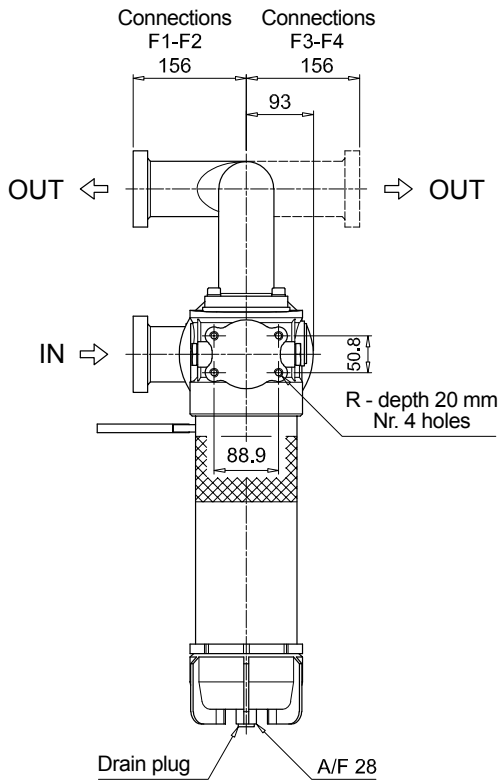

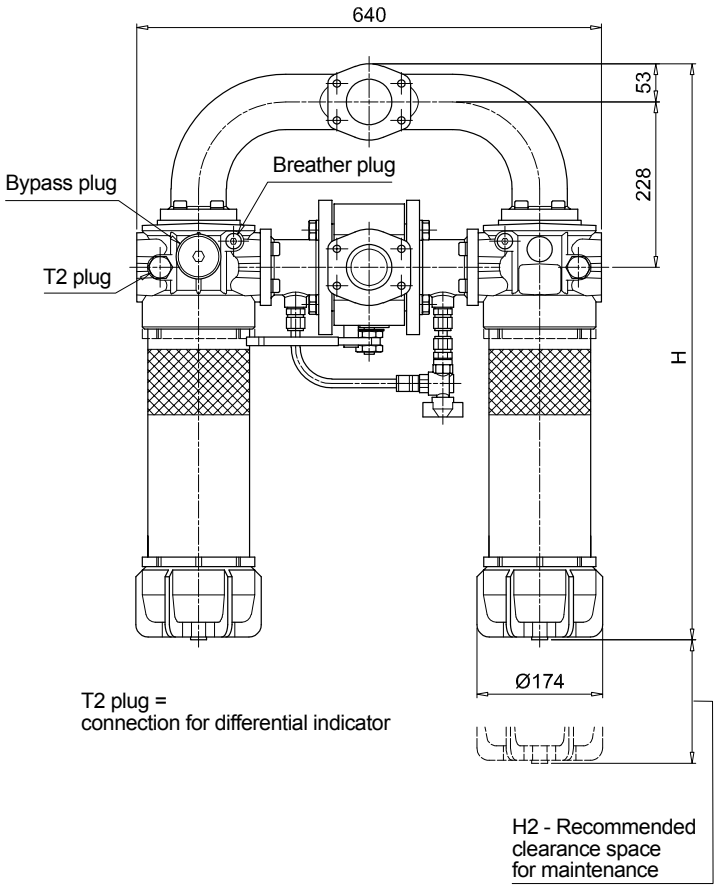

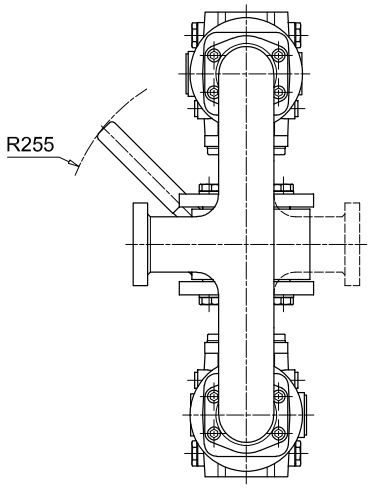

LMD 431

Designation & Ordering code

COMPLETE FILTER

Configuration example: LMD431 | 5 | B | V | F1 | A10 | N | P01

Series and size

LMD431

Length

5 | **6**

Bypass valve

S Without bypass

B 3.5 bar

Seals and treatments

	Filtration rating Axx	Mxx	Pxx
V FPM	•	•	•

Connections

F1 2 1/2" SAE 3000 psi/M
F2 2 1/2" SAE 3000 psi/UNC
F3 2 1/2" SAE 3000 psi/M, In-line connections
F4 2 1/2" SAE 3000 psi/UNC, In-line connections

Filtration rating (filter media)

A03 Inorganic microfiber 3 µm
A06 Inorganic microfiber 6 µm
A10 Inorganic microfiber 10 µm
A16 Inorganic microfiber 16 µm
A25 Inorganic microfiber 25 µm
M25 Wire mesh 25 µm
M60 Wire mesh 60 µm
M90 Wire mesh 90 µm
P10 Resin impregnated paper 10 µm
P25 Resin impregnated paper 25 µm

WA025 Water absorber inorganic microfiber 25 µm

Element Δp

N 20 bar

Execution

P01 MP Filtri standard
P02 With internal tube for reduced flow rate
Pxx Customized

FILTER ELEMENT

Configuration example: CU400 | 5 | A10 | V | N | P01

Element series and size

CU400

Element length

5 | **6**

Filtration rating (filter media)

A03 Inorganic microfiber 3 µm
A06 Inorganic microfiber 6 µm
A10 Inorganic microfiber 10 µm
A16 Inorganic microfiber 16 µm
A25 Inorganic microfiber 25 µm
M25 Wire mesh 25 µm
M60 Wire mesh 60 µm
M90 Wire mesh 90 µm
P10 Resin impregnated paper 10 µm
P25 Resin impregnated paper 25 µm

WA025 Water absorber inorganic microfiber 25 µm

Seals

	Filtration rating Axx	Mxx	Pxx
V FPM	•	•	•

Element Δp

N 20 bar

Execution

P01 MP Filtri standard
Pxx Customized

ACCESSORIES

Differential indicators		page
DEA	Electrical differential indicator	445
DEM	Electrical differential indicator	445-446
DLA	Electrical / visual differential indicator	446-447
DLE	Electrical / visual differential indicator	447
DTA	Electronic differential indicator	448
DVA	Visual differential indicator	448
DVM	Visual differential indicator	448

Additional features		page
T2	Plug	449

LMD431		
Filter length	H [mm]	H2 [mm]
5	1161	660
6	1491	690

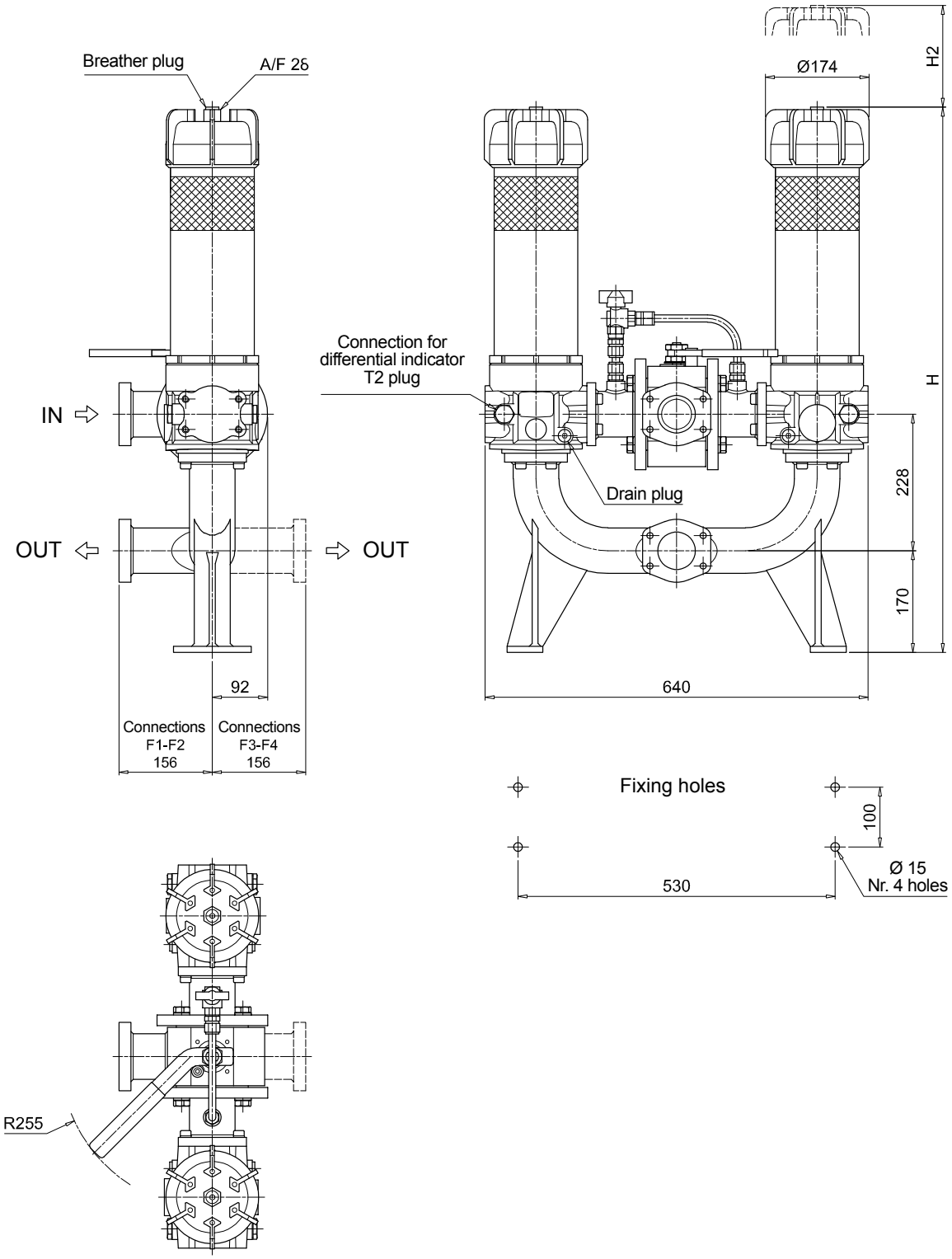

Order number for spare parts

LMD 400

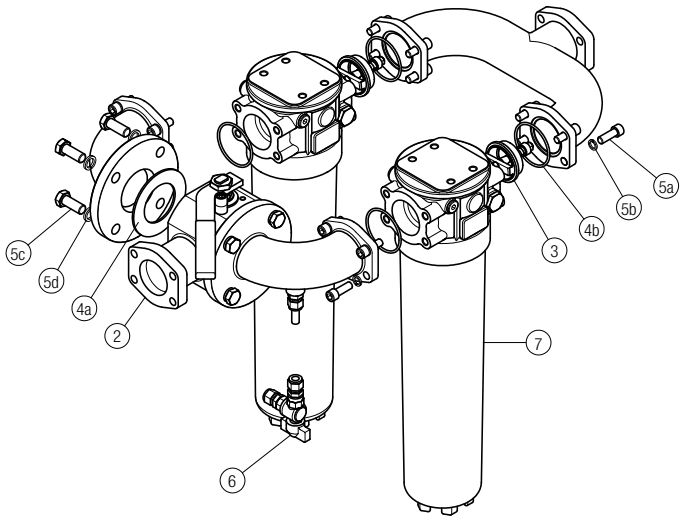

LMD 401

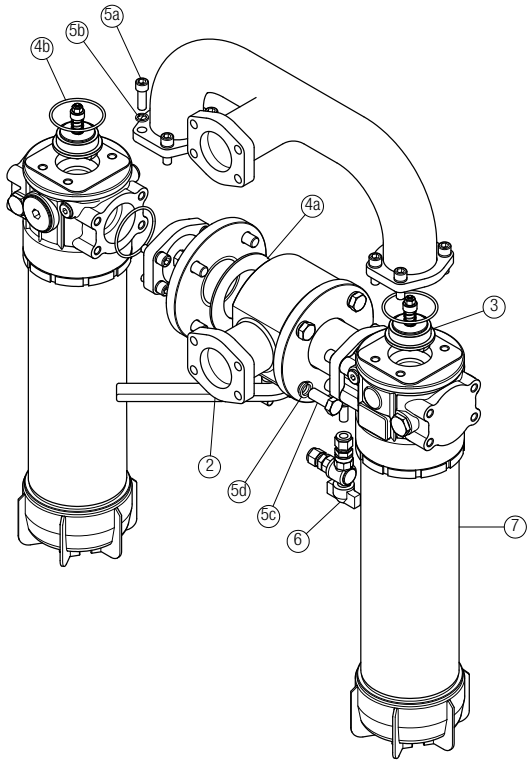

LMD 431

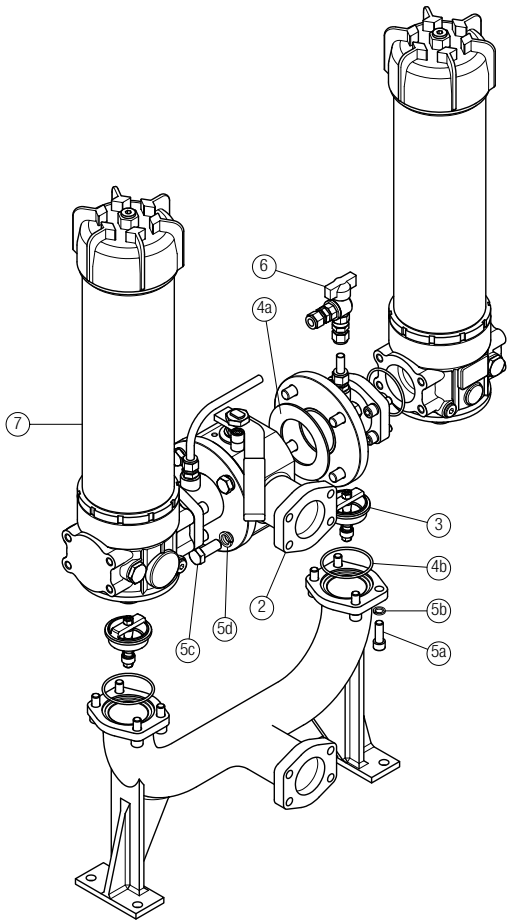

Item:	Q.ty: 1 pc. 2		Q.ty: 2 pcs. 3	Q.ty: 1 pc. 4 (4a ÷ 4b)	Q.ty: 1 pc. 5 (5a ÷ 5d)	Q.ty: 1 pc. 6	Q.ty: 2 pcs. 7
Filter series	**3-way ball valve PN 16** 2 1/2" SAE 3000 psi/M	2 1/2" SAE 3000 psi/UNC	**One-way valve**	**Seal Kit**	**Threaded fasteners kit**	**Kit ball valve with hose fitting**	**Filter** See order table
LMD 400-401-431	02001440	02001441	02001429	02050399	02049062	02025043	LMP400xF2.....

LMD 951 series

Maximum working pressure up to 1.6 MPa (16 bar) - Flow rate up to 1200 l/min

LMD 951 GENERAL INFORMATION

Description

Low & Medium Pressure filters

Duplex
Maximum working pressure up to 1.6 MPa (16 bar)
Flow rate up to 1200 l/min

LMD950 is a range of versatile low pressure duplex filter with integrated changeover function to allow the filter element replacement without the system shut-down.
They are directly connected to the lines of the system through the hydraulic fittings.

Available features:
- Flanged connections up to 4", for a maximum flow rate of 1200 l/min
- Base-mounting design, for ease of the replacement of the filter element
- Fine filtration rating, to get a good cleanliness level into the system
- Water removal elements, to remove the free water from the hydraulic fluid. For further information, see the Contamination Management document and the dedicate leaflet.
- Balancing valve, to equalize the housing pressure before the switch
- Bypass valve, to relieve excessive pressure drop across the filter media
- Drain ports, to remove the fluid from the housing prior the maintenance work
- Visual, electrical and electronic differential clogging indicators

Common applications:
- Systems where shut-down causes high costs
- Systems where shut-down causes safety issues

Technical data

Filter housing materials
- Head: Anodized Aluminium
- Housing: Anodized Aluminium
- Manifolds: Welded - Painted black
- Bypass valve: Steel
- 3-way ball valve: Steel body - Stainless Steel ball
- Check valve: Cast Iron body - AISI 304 leaf

Pressure
- SAE + DIN Flange
- Test pressure: 2.5 MPa (25 bar)

Bypass valve
- Opening pressure 350 kPa (3.5 bar) ±10%
- Other opening pressures on request.

Number of filter elements
LMD 951: 2 filter elements CU950-3

Δp element type
- Microfibre filter elements - series N: 20 bar
- Fluid flow through the filter element from OUT to IN

Seals
FPM series V

Temperature
From -25° C to +110° C

Connections
- LMD 951: In-line Inlet/Outlet
- Same side

Note
LMD 951 filters
are provided
for vertical mounting

Weights [kg] and volumes [dm³]

Filter series	Weights [kg]		Volumes [dm³]	
	DN 80	DN 100	DN 80	DN 100
LMD 951	102	130	62	66

FILTER ASSEMBLY SIZING
Flow rates [l/min]

		Filter element design - N Series					
Filter series	Length	A03	A06	A10	A16	A25	M25 M60 M90
LMD 951	**3**	853	884	995	1066	1096	1233

Maximum flow rate for a complete low and medium pressure filter with a pressure drop Δp = 0.7 bar.
The reference fluid has a kinematic viscosity of 30 mm^2/s (cSt) and a density of 0.86 kg/dm^3.
For different pressure drop or fluid viscosity we recommend to use our selection software available on www.mpfiltri.com.
You can also calculate the right size using the formulas present on the FILTER SIZING paragraph at the beginning of the full catalogue or at the beginning of the filter family brochure.
Please, contact our Sales Department for further additional information.

Hydraulic symbols

Filter series	Execution S	Execution B
LMD 951	•	•

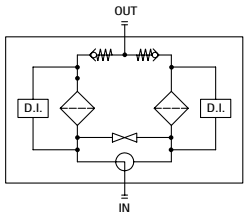

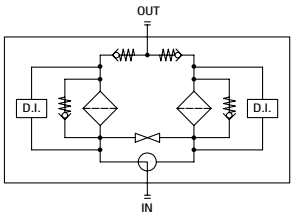

Pressure drop

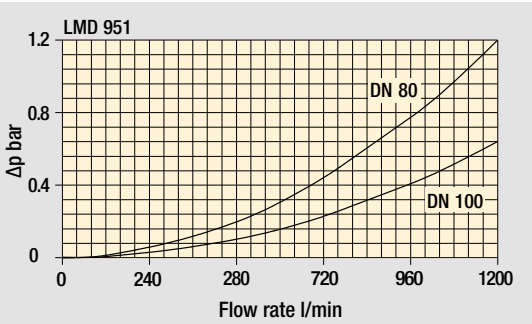

Filter housings
Δp pressure drop

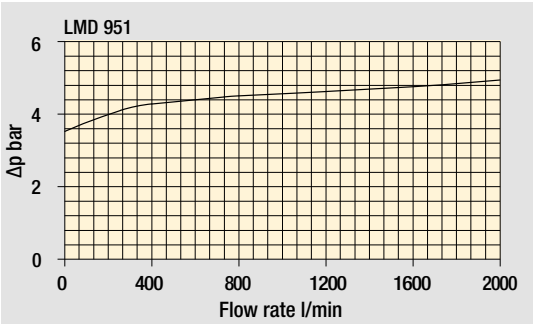

Bypass valve
pressure drop

The curves are plotted using mineral oil with density of 0.86 kg/dm^3 in compliance with ISO 3968. Δp varies proportionally with density.

Focus on

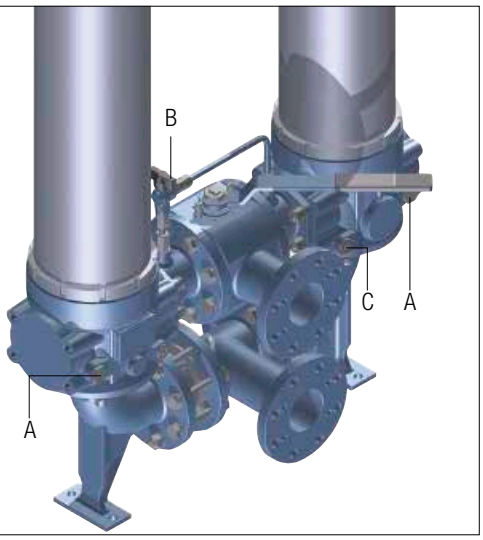

LMD 951
Fit one differential indicator
for individual filter assembly.

A	Indicator port Plug T2 - A/F 30
B	Compensation valve
C	Oil drain plug G 1/2" - A/F 10

Execution P02

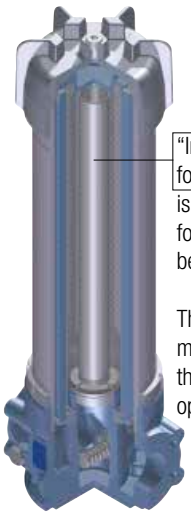

"Internal tube
for reduced flow rate"
is recommended
for flow rate values
below 100/150 l/min.

The use of option P02
makes it easier to fill
the housing with the
operating fluid.

LMD 951

Designation & Ordering code

COMPLETE FILTER

Configuration example: LMD951 | 3 | B | V | F1 | A10 | N | P01

Series and size

LMD951

Length

3

Bypass valve

S Without bypass
B 3.5 bar

Seals and treatments

V FPM

Connections

F1 3” SAE 3000 psi/M
F2 3” SAE 3000 psi/UNC
F3 4” SAE 3000 psi/M
F4 4” SAE 3000 psi/UNC
F5 3” SAE 3000 psi/M, In-line connections
F6 3” SAE 3000 psi/UNC, In-line connections
F7 4” SAE 3000 psi/M, In-line connections
F8 4” SAE 3000 psi/UNC, In-line connections

Filtration rating (filter media)

A03 Inorganic microfiber 3 µm
A06 Inorganic microfiber 6 µm
A10 Inorganic microfiber 10 µm
A16 Inorganic microfiber 16 µm
A25 Inorganic microfiber 25 µm
M25 Wire mesh 25 µm
M60 Wire mesh 60 µm
M90 Wire mesh 90 µm

WA025 Water absorber inorganic microfiber 25 µm

Element Δp

N 20 bar

Execution

P01 MP Filtri standard
P02 With internal tube for reduced flow rate
Pxx Customized

FILTER ELEMENT

Configuration example: CU950 | 3 | A10 | V | N | P01

Element series and size

CU950

Element length

3

Filtration rating (filter media)

A03 Inorganic microfiber 3 µm
A06 Inorganic microfiber 6 µm
A10 Inorganic microfiber 10 µm
A16 Inorganic microfiber 16 µm
A25 Inorganic microfiber 25 µm
M25 Wire mesh 25 µm
M60 Wire mesh 60 µm
M90 Wire mesh 90 µm

WA025 Water absorber inorganic microfiber 25 µm

Seals

V FPM

Element Δp

N 20 bar

Execution

P01 MP Filtri standard
Pxx Customized

ACCESSORIES

Differential indicators		page
DEA	Electrical differential indicator	445
DEM	Electrical differential indicator	445-446
DLA	Electrical / visual differential indicator	446-447
DLE	Electrical / visual differential indicator	447
DTA	Electronic differential indicator	448
DVA	Visual differential indicator	448
DVM	Visual differential indicator	448

Additional features		page
T2	Plug	449

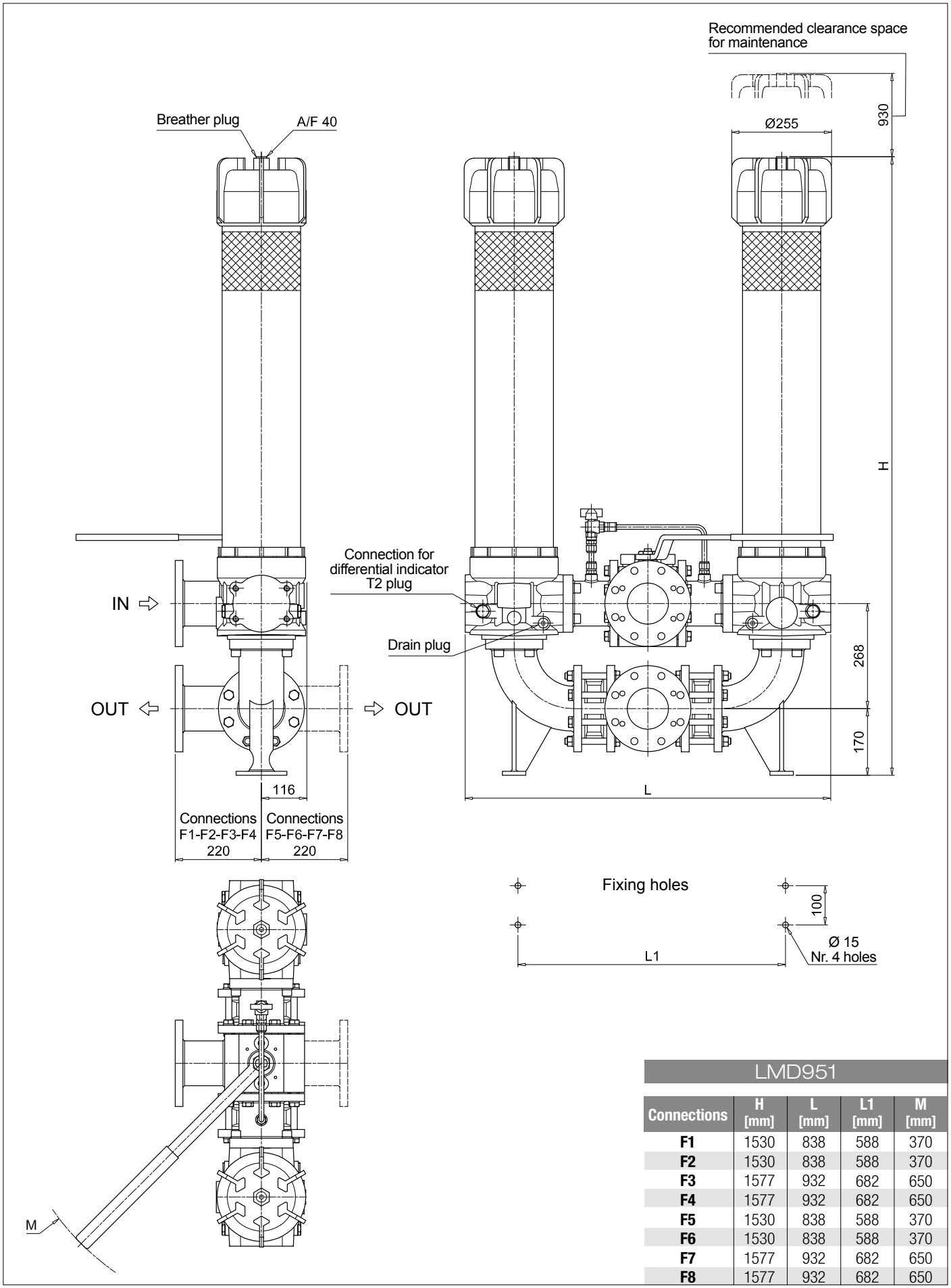

LMD951				
Connections	**H [mm]**	**L [mm]**	**L1 [mm]**	**M [mm]**
F1	1530	838	588	370
F2	1530	838	588	370
F3	1577	932	682	650
F4	1577	932	682	650
F5	1530	838	588	370
F6	1530	838	588	370
F7	1577	932	682	650
F8	1577	932	682	650

LMD 951 SPARE PARTS

Order number for spare parts

LMD 951

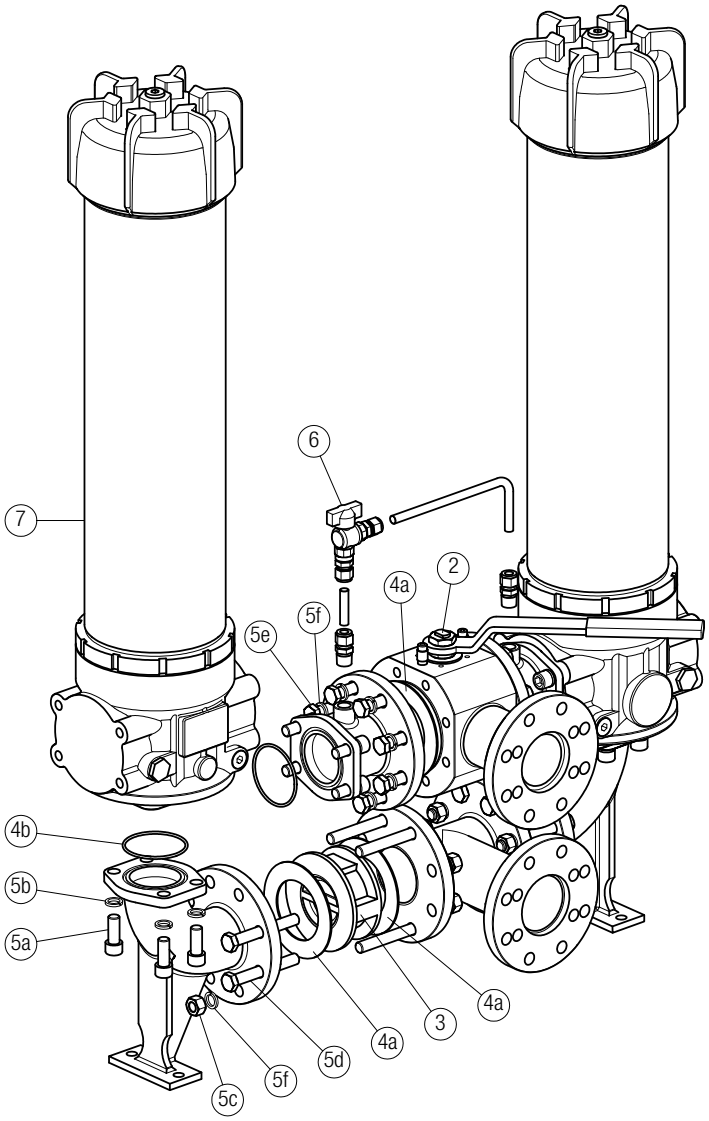

Item 7:
for complete filter code and spare parts, see
LMP 950 - 951 series chapter

Quantity:
- filter spare parts: 2 pcs.
- filter seal kit: 2 pcs.

Item:	Q.ty: 1 pc. 2		Q.ty: 2 pcs. 3	Q.ty: 1 pc. 4	Q.ty: 1 pc. 5 (5a ÷ 5f)	Q.ty: 1 pc. 6	Q.ty: 2 pcs. 7
Filter series LMD 951	**3-way ball valve PN 16**		**One-way valve**	**Seal Kit**	**Threaded fasteners kit**	**G 1/2" Ball Valve Kit with straight fittings**	**Filter**
F1 - F2 - F5 - F6 / D1 - D3 (3" SAE / DIN PN16 DN 80)	3" SAE 3000 psi/M 02001135	3" SAE 3000 psi/UNC 02001438	02001418	02050388	02049056	02025043	LMP9513xVF1xxxNP01
F3 - F4 - F7 - F8 / D2 - D4 (4" SAE / DIN PN16 DN 100)	4" SAE 3000 psi/M 02001162	4" SAE 3000 psi/UNC 02001439	02001419	02050389	02049057		LMP9513xVF3xxxNP01

DIN 24550 Filter element according to DIN 24550

LDP & LDD series

Maximum working pressure up to 6 MPa (60 bar) - Flow rate up to 360 l/min

LMP 900-901 series

Maximum working pressure up to 3 MPa (30 bar) - Flow rate up to 2000 l/min

LMP 902-903 series

Maximum working pressure up to 2 MPa (20 bar) - Flow rate up to 3000 l/min

LDP & LDD series

Filter element according to DIN 24550

Maximum working pressure up to 6 MPa (60 bar) - Flow rate up to 360 l/min

LDP & LDD GENERAL INFORMATION

Filter element according to DIN 24550

Descriptions

Low & Medium Pressure filters

Maximum working pressure up to 6 MPa (60 bar)
Flow rate up to 360 l/min

LDP is a range of versatile low pressure filter for transmission, protection of sensitive components in low pressure hydraulic systems and filtration of the coolant into the machine tools.
They are also suitable for the off-line filtration of small reservoirs.
They are directly connected to the lines of the system through the hydraulic fittings.

Available features:
- Female threaded connections up to 1 1/2", for a maximum return flow rate of 360 l/min
- Filter element designed in accordance with DIN 24550 regulation
- Fine filtration rating, to get a good cleanliness level into the system
- Water removal elements, to remove the free water from the hydraulic fluid. For further information, see the Contamination Management document and the dedicate leaflet.
- Bypass valve, to relieve excessive pressure drop across the filter media
- Visual, electrical and electronic differential clogging indicators

Common applications:
Delivery lines, in low pressure industrial equipment or mobile machines

LDD is a range of versatile low pressure duplex filter with integrated changeover function to allow the filter element replacement without the system shut-down.
They are directly connected to the lines of the system through the hydraulic fittings.

Available features:
- Female threaded connections up to 1 1/2" and flanged connections up to 1 1/2", for a maximum flow rate of 360 l/min
- Filter element designed in accordance with DIN 24550 regulation
- Fine filtration rating, to get a good cleanliness level into the system
- Water removal elements, to remove the free water from the hydraulic fluid. For further information, see the Contamination Management document and the dedicate leaflet.
- Balancing valve integrated in the changeover lever, to equalize the housing pressure before the switch
- Bypass valve, to relieve excessive pressure drop across the filter media
- Vent ports, to avoid air trapped into the filter going into the system
- Drain ports, to remove the fluid from the housing prior the maintenance work
- Optional sampling ports, to get samples of fluid or to connect additional instrument to the system
- Visual, electrical and electronic differential clogging indicators

Common applications:
- Systems where shut-down causes high costs
- Systems where shut-down causes safety issues

Technical data

Filter housing materials
- Head: Aluminium
- Bowl: Cataphoretic Painted Steel
- Bypass valve: AISI 304 - Nylon

Pressure
- Test pressure: 9 MPa (90 bar)
- Burst pressure: 21 MPa (210 bar)
- Pulse pressure fatigue test: 1 000 000 cycles with pressure from 0 to 6 MPa (60 bar)

Bypass valve
- Opening pressure 350 kPa (3.5 bar) ±10%
- Other opening pressures on request.

Δp element type
- Microfibre filter elements - series N: 20 bar
- Fluid flow through the filter element from OUT to IN

Seals
- Standard NBR series A
- Optional FPM series V

Temperature
From -25° C to +110° C

Connections
Inlet/Outlet In-Line

Note
LDP - LDD filters are provided for vertical mounting

Weights [kg] and volumes [dm³]

Filter series	Weights [kg]	Volumes [dm³]
LDP 016	2.0	1.2
LDP 025	3.0	1.6
LDP 040	5.0	2.2
LDD 016	9.3	3.6
LDD 025	9.5	4.1
LDD 040	11.3	4.8

Filter element according to DIN 24550

FILTER ASSEMBLY SIZING
Flow rates [l/min]

	Filter element design - N Series									
Filter series	A03	A06	A10	A16	A25	M25	M60	M90	P10	P25
LDP 016	83	91	178	198	222	350	353	358	295	309
LDP 025	124	134	227	245	265	357	358	358	319	330
LDP 040	173	191	274	284	311	359	360	361	332	337
LDD 016	68	73	120	130	140	189	190	192	169	174
LDD 025	93	98	142	149	157	191	192	192	178	181
LDD 040	118	126	161	165	175	192	192	193	182	184

Maximum flow rate for a complete low and medium pressure filter with a pressure drop Δp = 0.7 bar.
The reference fluid has a kinematic viscosity of 30 mm^2/s (cSt) and a density of 0.86 kg/dm^3.
For different pressure drop or fluid viscosity we recommend to use our selection software available on www.mpfiltri.com.
You can also calculate the right size using the formulas present on the FILTER SIZING paragraph at the beginning of the full catalogue or at the beginning of the filter family brochure.
Please, contact our Sales Department for further additional information.

Hydraulic symbols

Filter series	Execution S	Execution B	Execution S	Execution B
LDP 016	•	•		
LDP 025	•	•		
LDP 040	•	•		
LDD 016			•	•
LDD 025			•	•
LDD 040			•	•

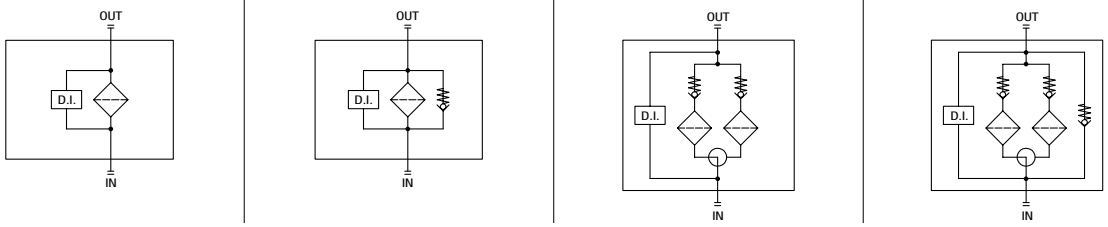

Pressure drop

Filter housings Δp pressure drop

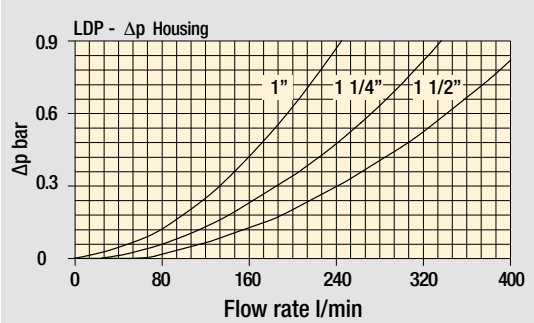

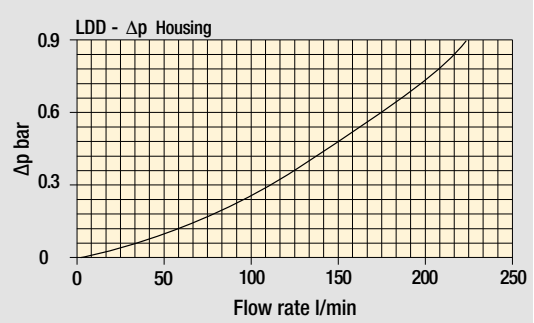

Bypass valve pressure drop

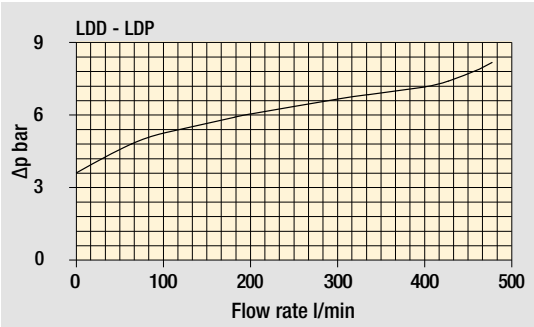

The curves are plotted using mineral oil with density of 0.86 kg/dm^3 in compliance with ISO 3968. Δp varies proportionally with density.

LDP Filter element according to DIN 24550

Designation & Ordering code

COMPLETE FILTER

Configuration example: LDP | 025 | B | A | D | 6 | A10 | N | P01

Series

LDP

Size

016 Element according to DIN 24550 - T3 DN160
025 Element according to DIN 24550 - T3 DN250
040 Element according to DIN 24550 - T3 DN400

Bypass valve

S Without bypass
B 3.5 bar

Seals and treatments

		Filtration rating Axx	Mxx	Pxx
A	NBR	•	•	•
V	FPM	•	•	•
W	NBR compatible with fluids HFA-HFB-HFC	•	•	

Connections

A G 1”
B G 1 1/4”
C G 1 1/2”
D 1” NPT
E 1 1/4” NPT
F 1 1/2” NPT
G SAE 16 - 1 5/16” - 12 UN
H SAE 20 - 1 5/8” - 12 UN
I SAE 24 - 1 7/8” - 12 UN

Connection for differential indicator

6 With plugged connection

Filtration rating (filter media)

A03 Inorganic microfiber 3 µm
A06 Inorganic microfiber 6 µm
A10 Inorganic microfiber 10 µm
A16 Inorganic microfiber 16 µm
A25 Inorganic microfiber 25 µm
M25 Wire mesh 25 µm
M60 Wire mesh 60 µm
M90 Wire mesh 90 µm
P10 Resin impregnated paper 10 µm
P25 Resin impregnated paper 25 µm

WA025 Water absorber inorganic microfiber 25 µm

Element Δp

N 20 bar

Execution

P01 MP Filtri standard
Pxx Customized

FILTER ELEMENT

Configuration example: DN | 025 | A10 | A | N | P01

Element series

DN

Element size

016 Element according to DIN 24550 - T3 DN160
025 Element according to DIN 24550 - T3 DN250
040 Element according to DIN 24550 - T3 DN400

Filtration rating (filter media)

A03 Inorganic microfiber 3 µm
A06 Inorganic microfiber 6 µm
A10 Inorganic microfiber 10 µm
A16 Inorganic microfiber 16 µm
A25 Inorganic microfiber 25 µm
M25 Wire mesh 25 µm
M60 Wire mesh 60 µm
M90 Wire mesh 90 µm
P10 Resin impregnated paper 10 µm
P25 Resin impregnated paper 25 µm

WA025 Water absorber inorganic microfiber 25 µm

Seals

		Filtration rating Axx	Mxx	Pxx
A	NBR	•	•	•
V	FPM	•	•	•
W	NBR compatible with fluids HFA-HFB-HFC	•	•	

Element Δp

N 20 bar

Execution

P01 MP Filtri standard
Pxx Customized

ACCESSORIES

Differential indicators

		page
DEA	Electrical differential indicator	445
DEM	Electrical differential indicator	445-446
DLA	Electrical / visual differential indicator	446-447
DLE	Electrical / visual differential indicator	447
DTA	Electronic differential indicator	448
DVA	Visual differential indicator	448
DVM	Visual differential indicator	448

Additional features

		page
T2	Plug	449

Dimensions

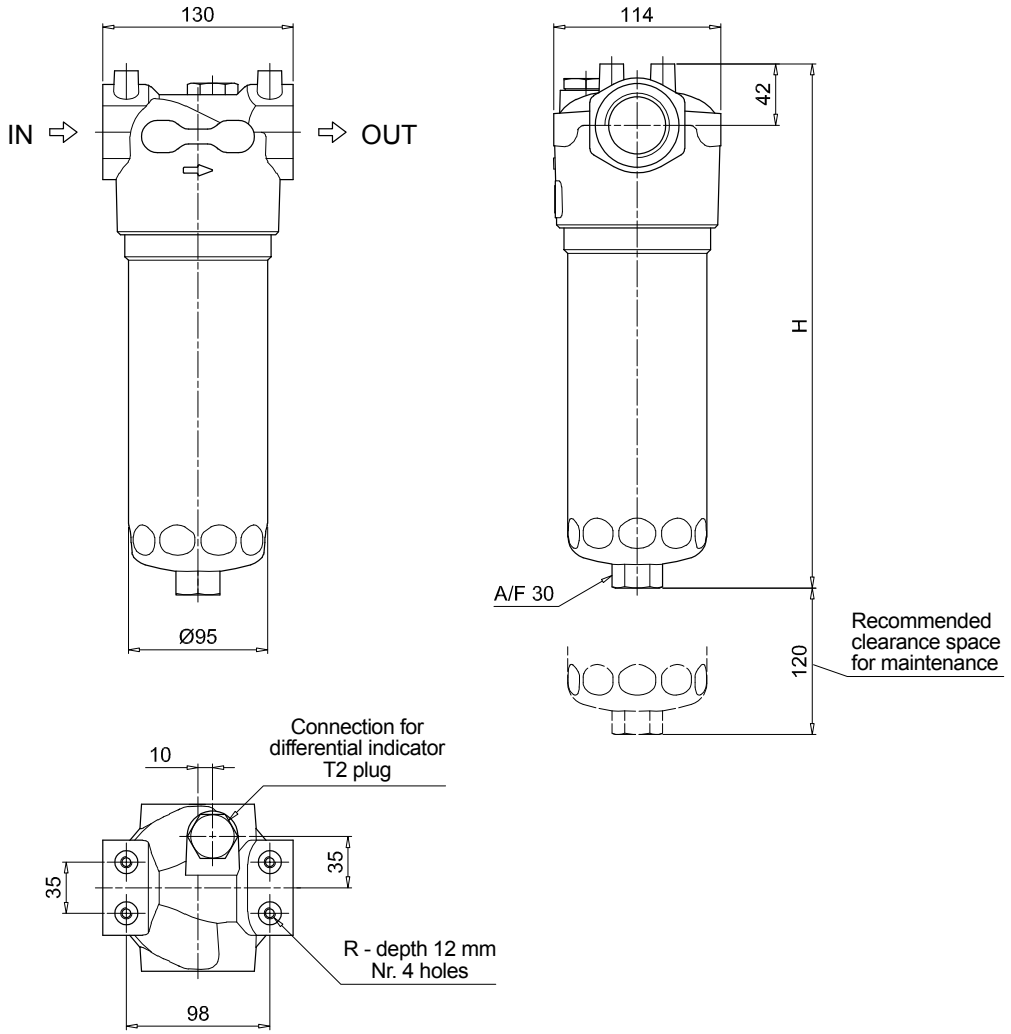

LDP

Filter size	H [mm]
016	268
025	358
040	508

Connections	R
A-B-C	M8
D-E-F-G-H-I	5/16" UNC

LDD Filter element according to DIN 24550

Designation & Ordering code

COMPLETE FILTER

Configuration example: LDD | 025 | B | A | C | 6 | A10 | N | P01

Series

LDD

Size

016 Element according to DIN 24550 - T3 DN160
025 Element according to DIN 24550 - T3 DN250
040 Element according to DIN 24550 - T3 DN400

Bypass valve

S Without bypass
B 3.5 bar

Seals and treatments

		Filtration rating Axx	Mxx	Pxx
A	NBR	•	•	•
V	FPM	•	•	•
W	NBR compatible with fluids HFA-HFB-HFC	•	•	

Connections

C G 1 1/2”
F 1 1/2” NPT
I SAE 24 - 1 7/8” - 12 UN
L 1 1/2” SAE 3000 psi/M + G 1 1/4”
M 1 1/2” SAE 3000 psi/UNC + 1 1/4” NPT
N 1 1/2” SAE 3000 psi/UNC + SAE 20 - 1 5/8” UN

Connection for differential indicator

6 With plugged connection

Filtration rating (filter media)

A03 Inorganic microfiber 3 µm
A06 Inorganic microfiber 6 µm
A10 Inorganic microfiber 10 µm
A16 Inorganic microfiber 16 µm
A25 Inorganic microfiber 25 µm
M25 Wire mesh 25 µm
M60 Wire mesh 60 µm
M90 Wire mesh 90 µm
P10 Resin impregnated paper 10 µm
P25 Resin impregnated paper 25 µm

WA025 Water absorber inorganic microfiber 25 µm

Element Δp

N 20 bar

Execution

P01 MP Filtri standard
Pxx Customized

FILTER ELEMENT

Configuration example: DN | 025 | A10 | A | N | P01

Element series

DN

Element size

016 Element according to DIN 24550 - T3 DN160
025 Element according to DIN 24550 - T3 DN250
040 Element according to DIN 24550 - T3 DN400

Filtration rating (filter media)

A03 Inorganic microfiber 3 µm
A06 Inorganic microfiber 6 µm
A10 Inorganic microfiber 10 µm
A16 Inorganic microfiber 16 µm
A25 Inorganic microfiber 25 µm
M25 Wire mesh 25 µm
M60 Wire mesh 60 µm
M90 Wire mesh 90 µm
P10 Resin impregnated paper 10 µm
P25 Resin impregnated paper 25 µm

WA025 Water absorber inorganic microfiber 25 µm

Seals

		Filtration rating Axx	Mxx	Pxx
A	NBR	•	•	•
V	FPM	•	•	•
W	NBR compatible with fluids HFA-HFB-HFC	•	•	

Element Δp

N 20 bar

Execution

P01 MP Filtri standard
Pxx Customized

ACCESSORIES

Differential indicators		page
DEA	Electrical differential indicator	445
DEM	Electrical differential indicator	445-446
DLA	Electrical / visual differential indicator	446-447
DLE	Electrical / visual differential indicator	447
DTA	Electronic differential indicator	448
DVA	Visual differential indicator	448
DVM	Visual differential indicator	448

Additional features		page
T2	Plug	449

Dimensions

LDD	
Filter size	**H [mm]**
016	293
025	383
040	533

Connections	R
C	M10
F - I	3/8" UNC
L	M10
M - N	3/8" UNC

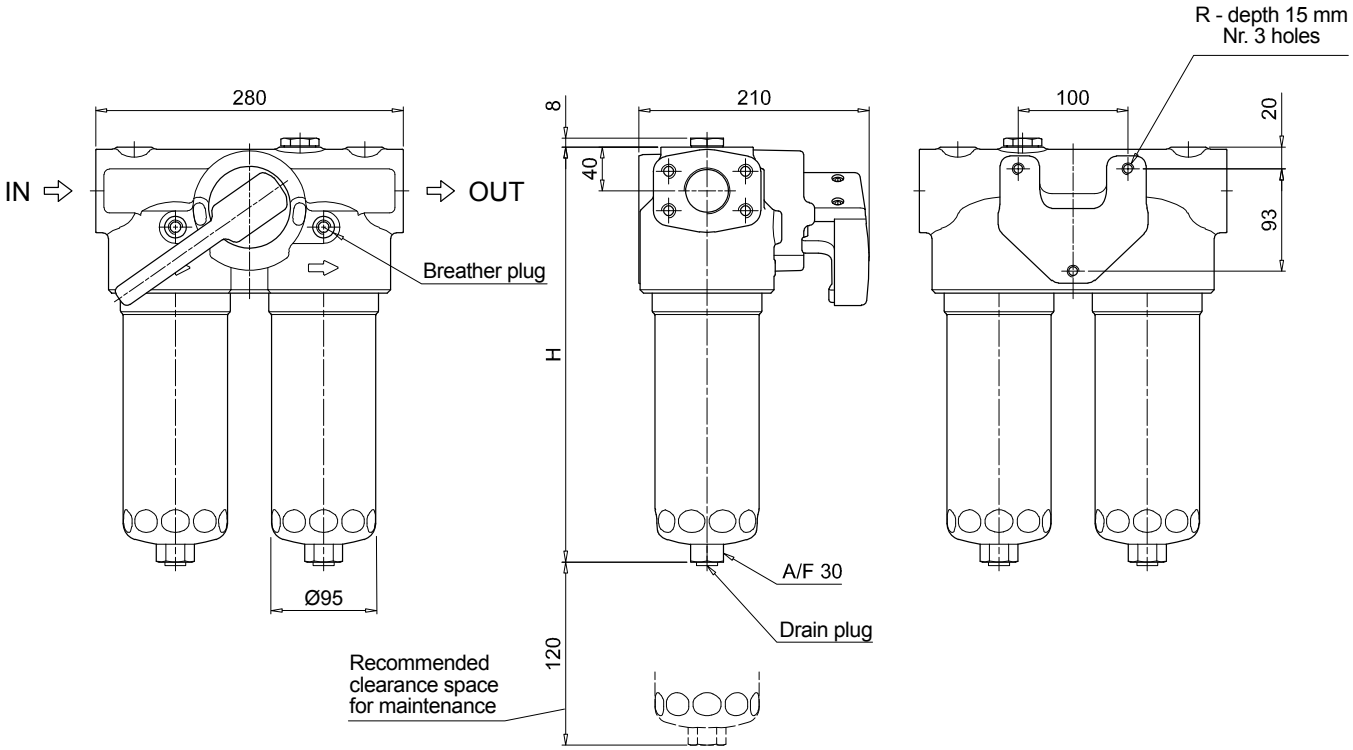

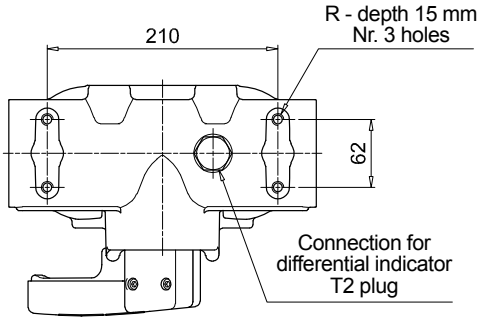

Filter element according to DIN 24550

Order number for spare parts

LDP

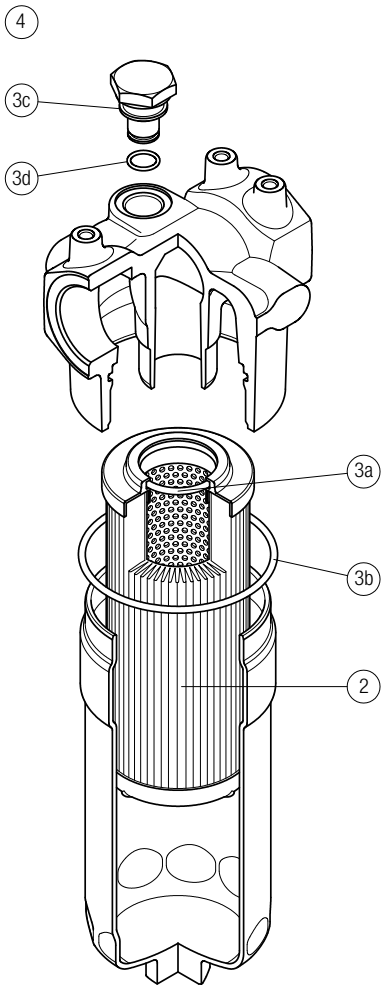

Item:	Q.ty: 1 pc. 2	Q.ty: 1 pc. 3 (3a ÷ 3d)		Q.ty: 1 pc. 4	
Filter series	Filter element	Seal Kit code number NBR	FPM	Indicator connection plug NBR	FPM
LDP	See order table	02050435	02050436	T2H	T2V

Filter element according to DIN 24550

Order number for spare parts

LDD

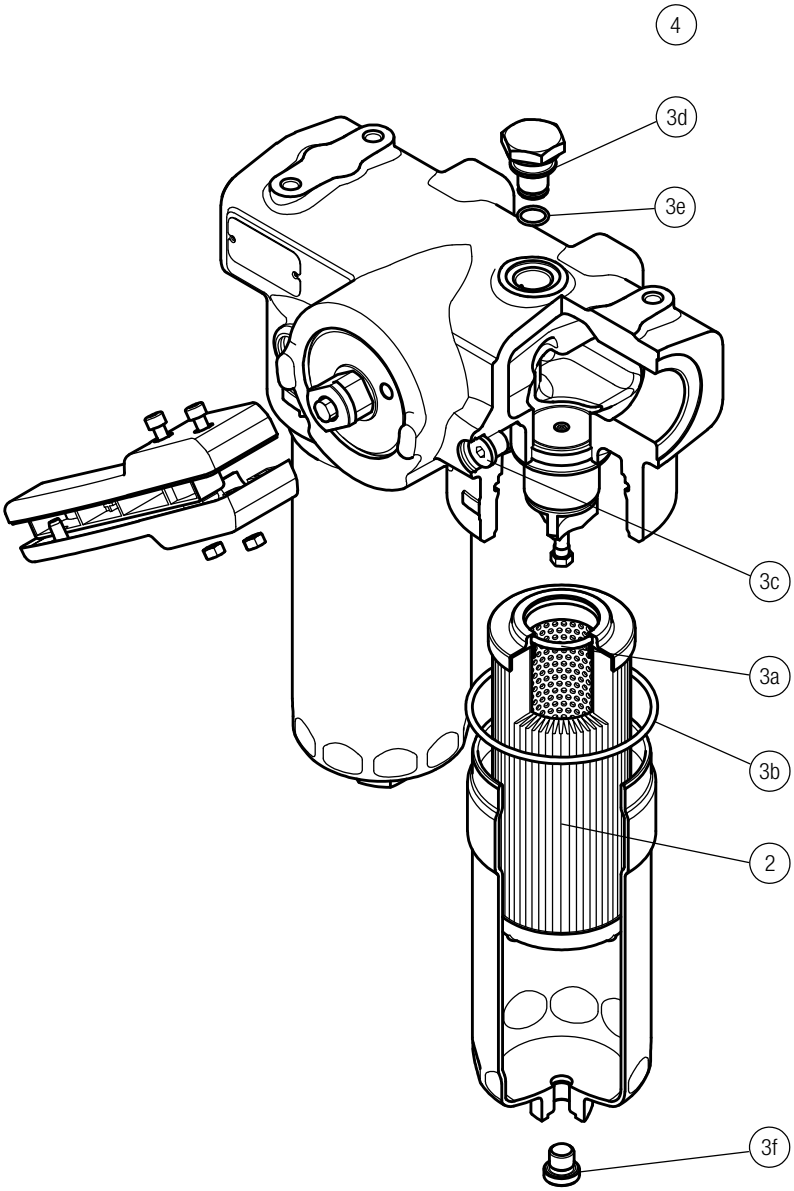

Item:	Q.ty: 1 pc. 2	Q.ty: 1 pc. 3 (3a ÷ 3i)		Q.ty: 2 pc. 4	
Filter series	**Filter element**	**Seal Kit code number NBR**	**FPM**	**Indicator connection plug NBR**	**FPM**
LDD	See order table	02050671	02050672	T2H	T2V

LMP 900-901 series

Filter element according to DIN 24550

Maximum working pressure up to 3 MPa (30 bar) - Flow rate up to 2000 l/min

LMP 900-901 GENERAL INFORMATION

Filter element according to DIN 24550

Description

Low & Medium Pressure filters

Maximum working pressure up to 3 MPa (30 bar)
Flow rate up to 2000 l/min

LMP900 is a range of low pressure filter with large filtration surface mainly suitable for lubrication, off-line filtration of the reservoirs and filtration equipment.
They are directly connected to the lines of the system through the hydraulic fittings.

Available features:
- Flanged connections up to 4", for a maximum flow rate of 2000 l/min
- In line or 90° connections, to meet any type of application
- Filter element designed in accordance with DIN 24550 regulation
- Fine filtration rating, to get a good cleanliness level into the system
- Water removal elements, to remove the free water from the hydraulic fluid. For further information, see the Contamination Management document and the dedicate leaflet.
- Bypass valve, to relieve excessive pressure drop across the filter media
- Vent ports, to avoid air trapped into the filter going into the system
- Drain ports, to remove the fluid from the housing prior the maintenance work
- Visual, electrical and electronic differential clogging indicators

Common applications:
- Off-line filtration of reservoirs
- Filtration systems
- Lubrication systems

Technical data

Filter housing materials
- Head: Anodized Aluminium
- Housing: Anodized Aluminium
- Manifolds: Anodized Aluminium
- Bypass valve: Steel

Pressure
- Test pressure: 4.5 MPa (45 bar)
- Burst pressure: 12 MPa (120 bar)
- Pulse pressure fatigue test: 1 000 000 cycles with pressure from 0 to 3 MPa (30 bar)

Bypass valve
- Opening pressure 350 kPa (3.5 bar) ±10%
- Other opening pressures on request.

Number of filter elements
LMP 900-1: 1 filter element CU900
LMP 900-2: 2 filter elements CU900

Filter elements
Filter element according to DIN 24550
Size: 1000

Δp element type
- Microfibre filter elements - series N: 20 bar
- Fluid flow through the filter element from OUT to IN

Connections
LMP 900: In-line Inlet/Outlet
LMP 901: 90° Inlet/Outlet

Seals
- Standard NBR series A
- Optional FPM series V

Temperature
From -25 °C to +110 °C

Note
LMP 900 - 901 filters are provided for vertical mounting

Weights [kg] and volumes [dm³]

Filter series	Weights [kg]			Volumes [dm³]		
	Length	1	2	Length	1	2
LMP 900-901		19.2	30.4		16	24

Filter element according to DIN 24550

FILTER ASSEMBLY SIZING
Flow rates [l/min]

Filter series	Length	Filter element design - N Series					
		A03	A06	A10	A16	A25	M25 M60 M90
LMP 900	**1**	706	877	1264	1291	1444	1803
	2	1100	1264	1556	1573	1668	1867
LMP 901	**1**	715	899	1337	1369	1552	2000
	2	1147	1337	1689	1710	1828	2081

Maximum flow rate for a complete low and medium pressure filter with a pressure drop Δp = 0.7 bar.
The reference fluid has a kinematic viscosity of 30 mm^2/s (cSt) and a density of 0.86 kg/dm^3.
For different pressure drop or fluid viscosity we recommend to use our selection software available on www.mpfiltri.com.
You can also calculate the right size using the formulas present on the FILTER SIZING paragraph at the beginning of the full catalogue or at the beginning of the filter family brochure.
Please, contact our Sales Department for further additional information.

LMP 900-901 Length 2

Hydraulic symbols

Filter series	Execution S	Execution B
LMP 900-901	•	•

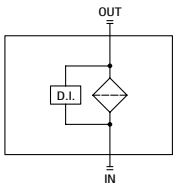

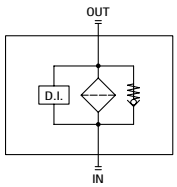

Pressure drop

Filter housings Δp pressure drop

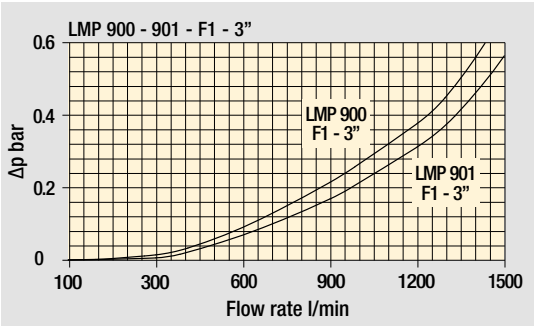

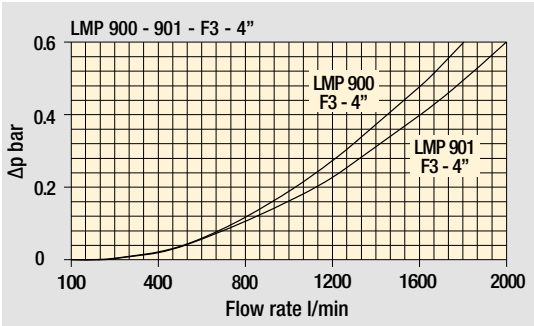

Bypass valve pressure drop

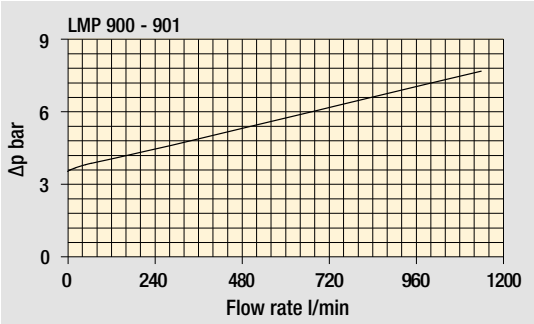

The curves are plotted using mineral oil with density of 0.86 kg/dm^3 in compliance with ISO 3968. Δp varies proportionally with density.

LMP 900-901 Filter element according to DIN 24550

Designation & Ordering code

COMPLETE FILTER

Configuration example: LMP901 | 2 | B | A | F2 | A10 | N | P01

Series and size

LMP900 | **LMP901**

Length

1 | **2**

Bypass valve

S Without bypass
B 3.5 bar

Seals and treatments

A NBR
V FPM

Connections

F1 3” SAE 3000 psi/M
F2 3” SAE 3000 psi/UNC
F3 4” SAE 3000 psi/M
F4 4” SAE 3000 psi/UNC

Filtration rating (filter media)

A03 Inorganic microfiber 3 µm
A06 Inorganic microfiber 6 µm
A10 Inorganic microfiber 10 µm
A16 Inorganic microfiber 16 µm
A25 Inorganic microfiber 25 µm
M25 Wire mesh 25 µm
M60 Wire mesh 60 µm
M90 Wire mesh 90 µm

WA025 Water absorber inorganic microfiber 25 µm

Element Δp

N 20 bar

Execution

		Filter length 1	Filter length 2
P01	MP Filtri standard	•	•
P02	Maintenance from the bottom of the housing		•
Pxx	Customized		

FILTER ELEMENT

Configuration example: CU900 | A10 | A | N | P01

Element series and size

CU900

Length

1 Nr. 1 filter element
2 Nr. 2 filter elements

Filtration rating (filter media)

A03 Inorganic microfiber 3 µm
A06 Inorganic microfiber 6 µm
A10 Inorganic microfiber 10 µm
A16 Inorganic microfiber 16 µm
A25 Inorganic microfiber 25 µm
M25 Wire mesh 25 µm
M60 Wire mesh 60 µm
M90 Wire mesh 90 µm

WA025 Water absorber inorganic microfiber 25 µm

Seals

A NBR
V FPM

Element Δp

N 20 bar

Execution

P01 MP Filtri standard
Pxx Customized

ACCESSORIES

Differential indicators		page
DEA	Electrical differential indicator	445
DEM	Electrical differential indicator	445-446
DLA	Electrical / visual differential indicator	446-447
DLE	Electrical / visual differential indicator	447
DTA	Electronic differential indicator	448
DVA	Visual differential indicator	448
DVM	Visual differential indicator	448

Additional features		Filter length 1	Filter length 2	page
T2	Plug	•	•	449
CFA	Retaining clamp		•	450

Dimensions

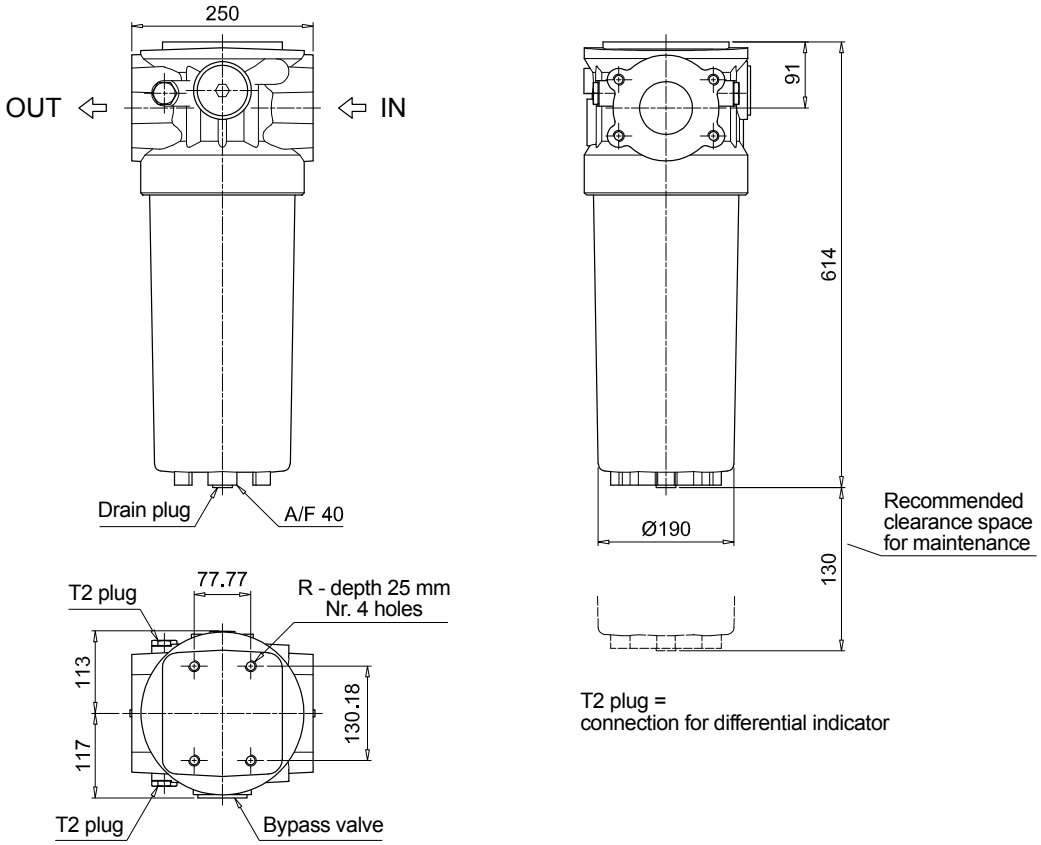

LMP900

Length 1

Connections	R
F1 - F3	M16
F2 - F4	5/8" UNC

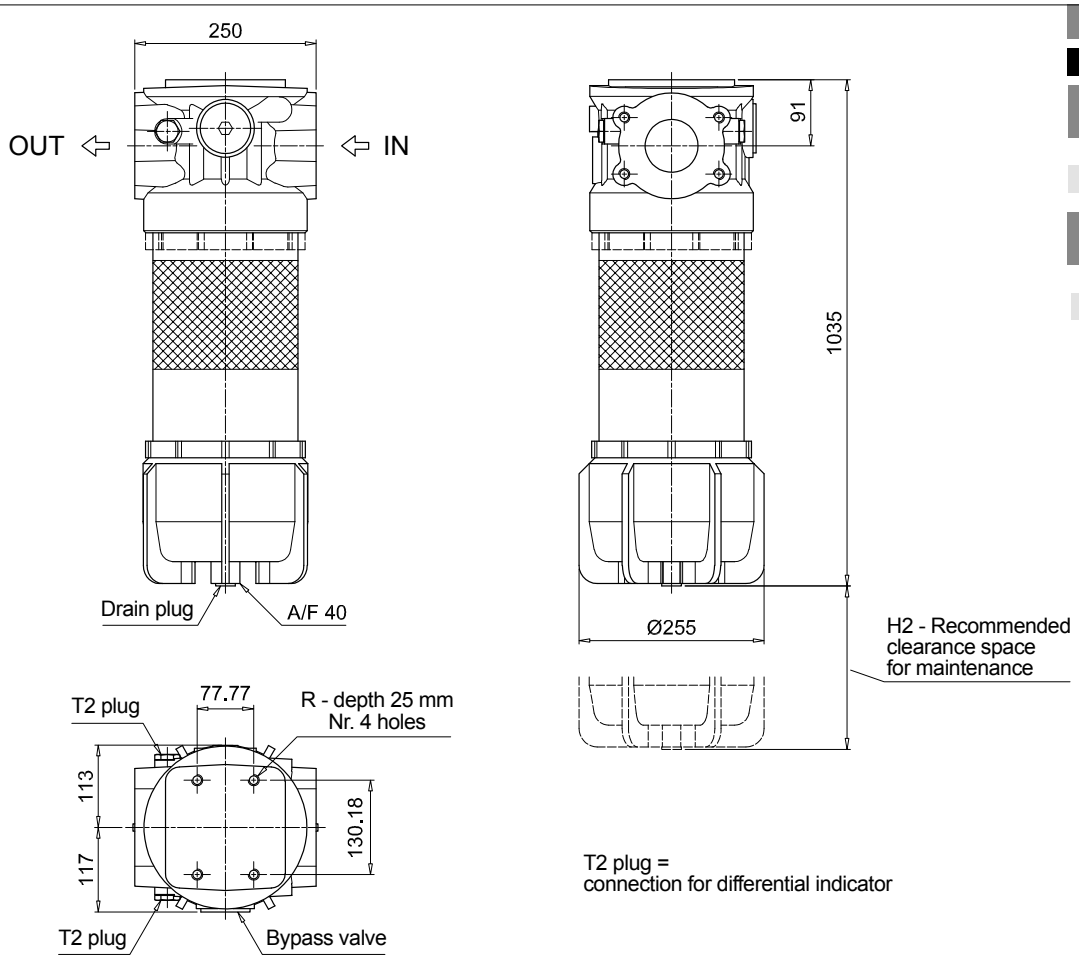

LMP900

Length 2

Execution	H2 [mm]
P01	130
P02	800

Connections	R
F1 - F3	M16
F2 - F4	5/8" UNC

Dimensions

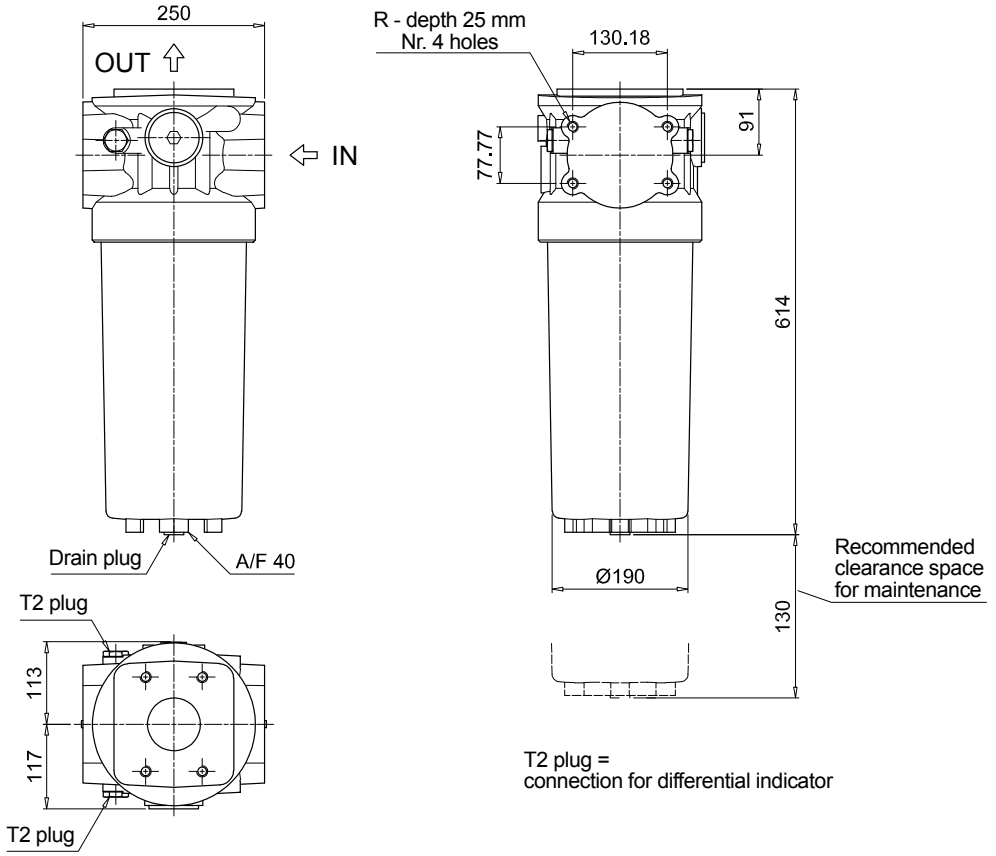

LMP901

Length 1

Connections	R
F1 - F3	M16
F2 - F4	5/8" UNC

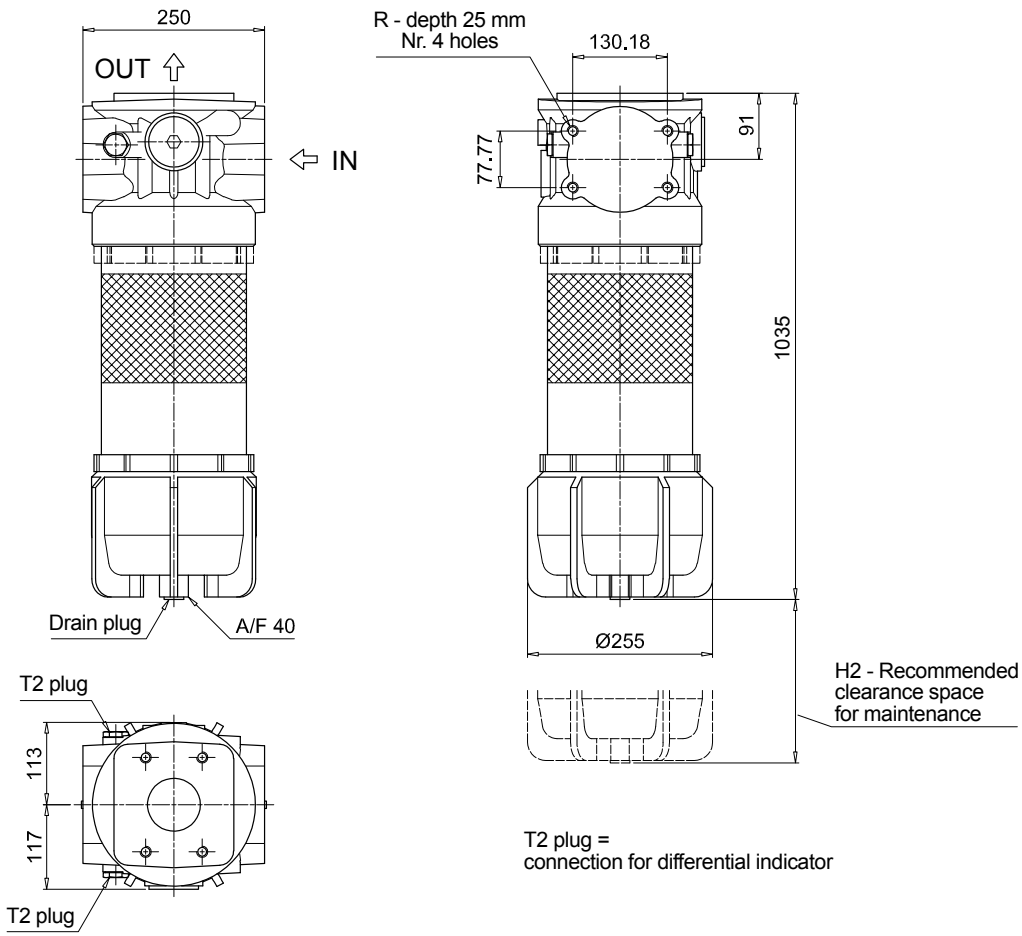

LMP901

Length 2

Execution	H2 [mm]
P01	130
P02	800

Connections	R
F1 - F3	M16
F2 - F4	5/8" UNC

Order number for spare parts

LMP 900 - 901
length 1

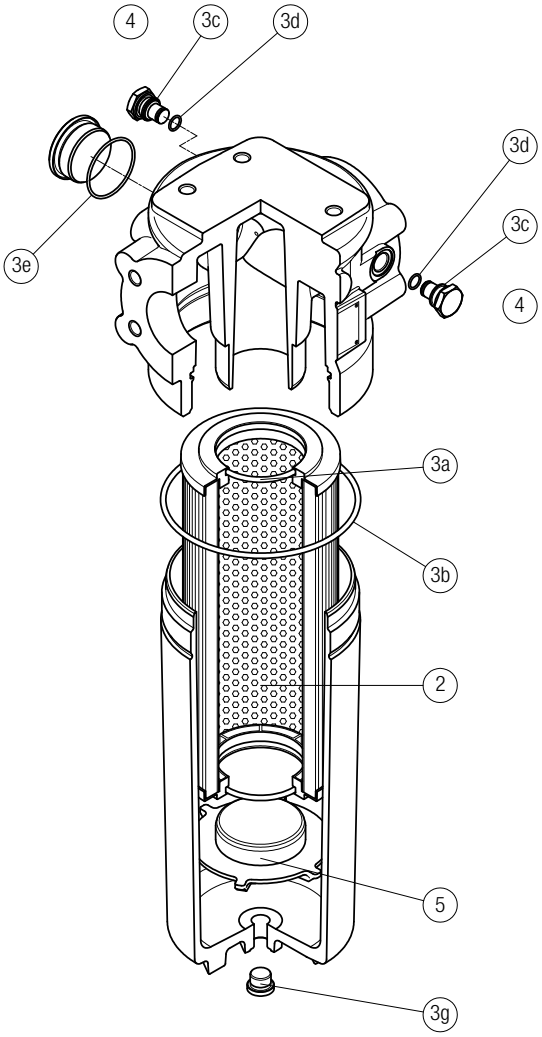

LMP 900 - 901
length 2

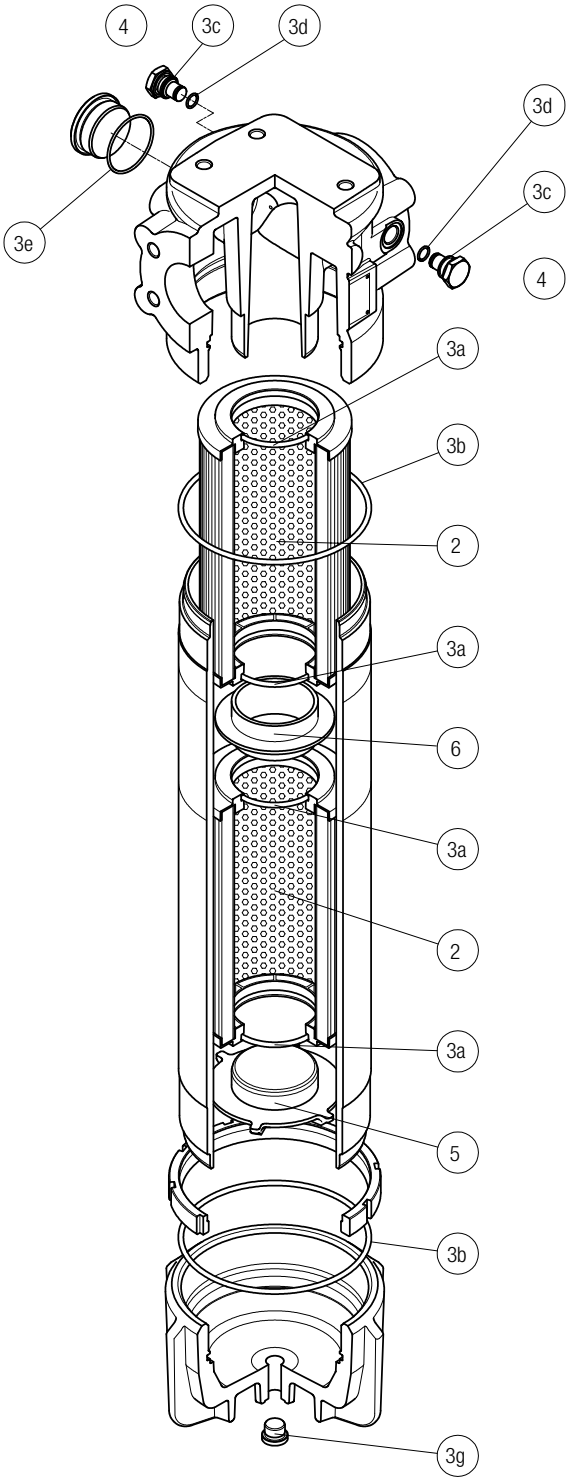

Item:	2		3 (3a ÷ 3g)			4			5		6	
Filter series	Filter element Q.ty		Seal Kit code number Q.ty	NBR	FPM	Indicator connection plug Q.ty	NBR	FPM	Housing spigot Q.ty		Coupling spigot Q.ty	
LMP 900-901 length 1	1 pc.	See order table	1 pc.	02050363	02050364	2 pcs.	T2H	T2V	1 pc.	01044104	-	01044099
LMP 900-901 length 2	2 pcs.		1 pc.	02050365	02050366	2 pcs.			1 pc.		1 pc.	

LMP 902-903 series

Filter element according to DIN 24550

Maximum working pressure up to 2 MPa (20 bar) - Flow rate up to 3000 l/min

LMP 902-903 GENERAL INFORMATION

Filter element according to DIN 24550

Description

Low & Medium Pressure filters

Maximum working pressure up to 2 MPa (20 bar)
Flow rate up to 3000 l/min

LMP902 and LMP903 are ranges of low pressure filter with large filtration surface mainly suitable for lubrication, off-line filtration of the reservoirs and filtration equipment.
Multiple LMP950 filters are connected to a manifold to reduce the pressure drop caused by the filter media and to increase the life time of the filter element.
They are directly connected to the lines of the system through the hydraulic fittings.

Available features:
- 4" flanged connections, for a maximum flow rate of 3000 l/min
- Filter element designed in accordance with DIN 24550 regulation
- Fine filtration rating, to get a good cleanliness level into the system
- Water removal elements, to remove the free water from the hydraulic fluid. For further information, see the Contamination Management document and the dedicate leaflet.
- Bypass valve, to relieve excessive pressure drop across the filter media
- Vent ports, to avoid air trapped into the filter going into the system
- Drain ports, to remove the fluid from the housing prior the maintenance work
- Visual, electrical and electronic differential clogging indicators

Common applications:
- Off-line filtration of reservoirs
- Filtration systems

Technical data

Filter housing materials
- Head: Anodized Aluminium
- Housing: Anodized Aluminium
- Manifolds: Welded - Phosphatized Steel
- Bypass valve: Steel
- Size 1000 filter elements complying with DIN 24550 standard

Pressure
- Test pressure: 3.5 MPa (35 bar)

Bypass valve
- Opening pressure 350 kPa (3.5 bar) ±10%
- Other opening pressures on request.

Number of filter elements
LMP 902: 4 filter elements CU900
LMP 903: 6 filter elements CU900

Filter elements
Filter element according to DIN 24550
Size: 1000

Δp element type
- Microfibre filter elements - series N: 20 bar
- Fluid flow through the filter element from OUT to IN

Connections
LMP 902-903: In-line Inlet/Outlet

Seals
- Standard NBR series A
- Optional FPM series V

Temperature
From -25 °C to +110 °C

Note
LMP 902 - 903 filters are provided for vertical mounting

Weights [kg] and volumes [dm³]

Filter series	Weights [kg]	Volumes [dm³]
	Length 2	Length 2
LMP 902	89.6	58
LMP 903	129.2	87

Filter element according to DIN 24550

FILTER ASSEMBLY SIZING
Flow rates [l/min]

		Filter element design - N Series					
Filter series	Length	A03	A06	A10	A16	A25	M25 M60 M90
LMP 902	**2**	2217	2576	3241	3282	3506	3987
LMP 903	**2**	2838	3170	3720	3755	3926	4278

Maximum flow rate for a complete low and medium pressure filter with a pressure drop Δp = 0.7 bar.
The reference fluid has a kinematic viscosity of 30 mm^2/s (cSt) and a density of 0.86 kg/dm^3.
For different pressure drop or fluid viscosity we recommend to use our selection software available on www.mpfiltri.com.
You can also calculate the right size using the formulas present on the FILTER SIZING paragraph at the beginning of the full catalogue or at the beginning of the filter family brochure.
Please, contact our Sales Department for further additional information.

Hydraulic symbols

Filter series	Execution S	Execution B	Execution S	Execution B
LMP 902	•	•		
LMP 903			•	•

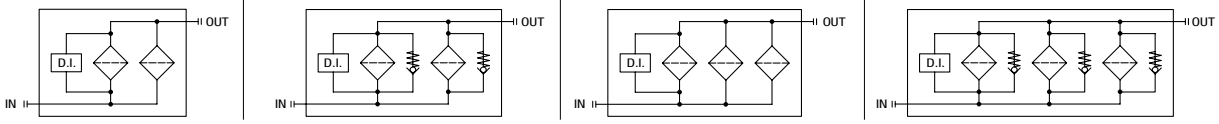

Pressure drop
Filter housings Δp pressure drop

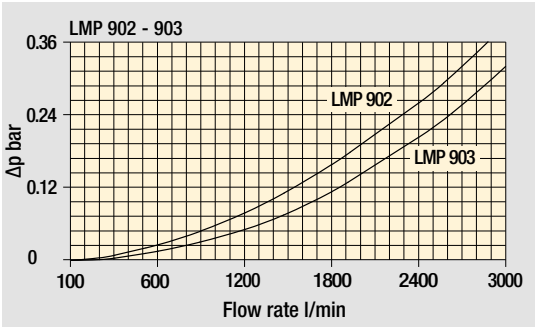

Bypass valve pressure drop

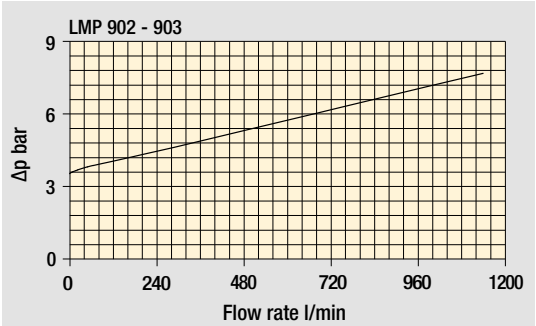

The curves are plotted using mineral oil with density of 0.86 kg/dm^3 in compliance with ISO 3968. Δp varies proportionally with density.

LMP 902-903 GENERAL INFORMATION

Filter element according to DIN 24550

Manifolds

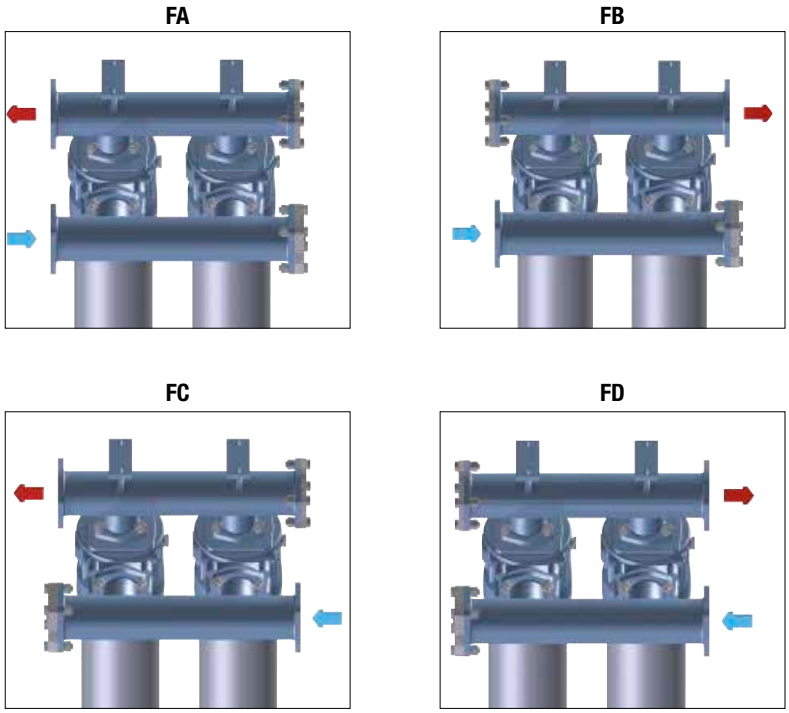

Position of manifolds
IN - OUT connections

Focus on

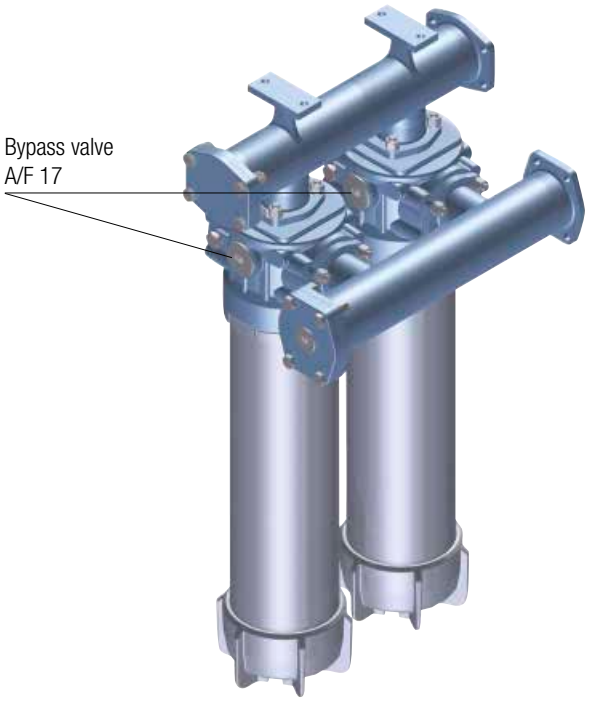

LMP 902-903 Filter element according to DIN 24550

Designation & Ordering code

COMPLETE FILTER

Configuration example: LMP902 | 2 | B | A | FA | A10 | N | P01

Series and size

LMP902 | **LMP903**

Length

2

Bypass valve

S	Without bypass	**B**	3.5 bar

Seals and treatments

A	NBR
V	FPM

Connections		IN	OUT
FA	4" SAE 3000 psi	left	left
FB	4" SAE 3000 psi	left	right
FC	4" SAE 3000 psi	right	left
FD	4" SAE 3000 psi	right	right

Filtration rating (filter media)

A03	Inorganic microfiber 3 µm	**M25**	Wire mesh 25 µm
A06	Inorganic microfiber 6 µm	**M60**	Wire mesh 60 µm
A10	Inorganic microfiber 10 µm	**M90**	Wire mesh 90 µm
A16	Inorganic microfiber 16 µm		
A25	Inorganic microfiber 25 µm		

WA025 Water absorber inorganic microfiber 25 µm

Element Δp

N	20 bar

Execution

P01	MP Filtri standard
Pxx	Customized

FILTER ELEMENT

Configuration example: CU900 | A10 | A | N | P01

Element series and size

CU900

Filter series and size

LMP902	Nr. 4 filter elements
LMP903	Nr. 6 filter elements

Filtration rating (filter media)

A03	Inorganic microfiber 3 µm	**M25**	Wire mesh 25 µm
A06	Inorganic microfiber 6 µm	**M60**	Wire mesh 60 µm
A10	Inorganic microfiber 10 µm	**M90**	Wire mesh 90 µm
A16	Inorganic microfiber 16 µm		
A25	Inorganic microfiber 25 µm		

WA025 Water absorber inorganic microfiber 25 µm

Seals

A	NBR
V	FPM

Element Δp

N	20 bar

Execution

P01	MP Filtri standard
Pxx	Customized

ACCESSORIES

Differential indicators		page
DEA	Electrical differential indicator	445
DEM	Electrical differential indicator	445-446
DLA	Electrical / visual differential indicator	446-447
DLE	Electrical / visual differential indicator	447
DTA	Electronic differential indicator	448
DVA	Visual differential indicator	448
DVM	Visual differential indicator	448

Additional features		page
T2	Plug	449

LMP902

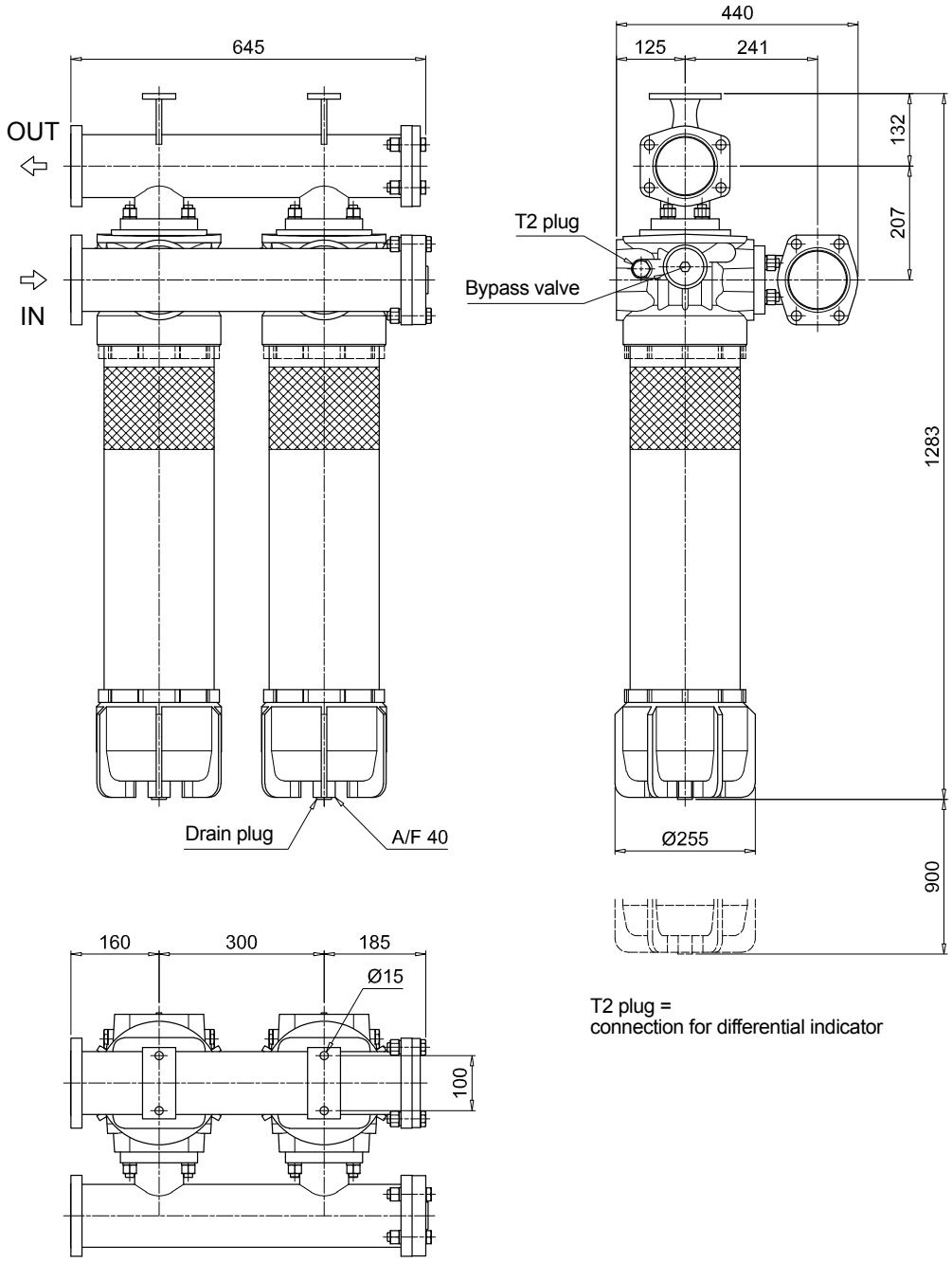

T2 plug =
connection for differential indicator

Dimensions

LMP903

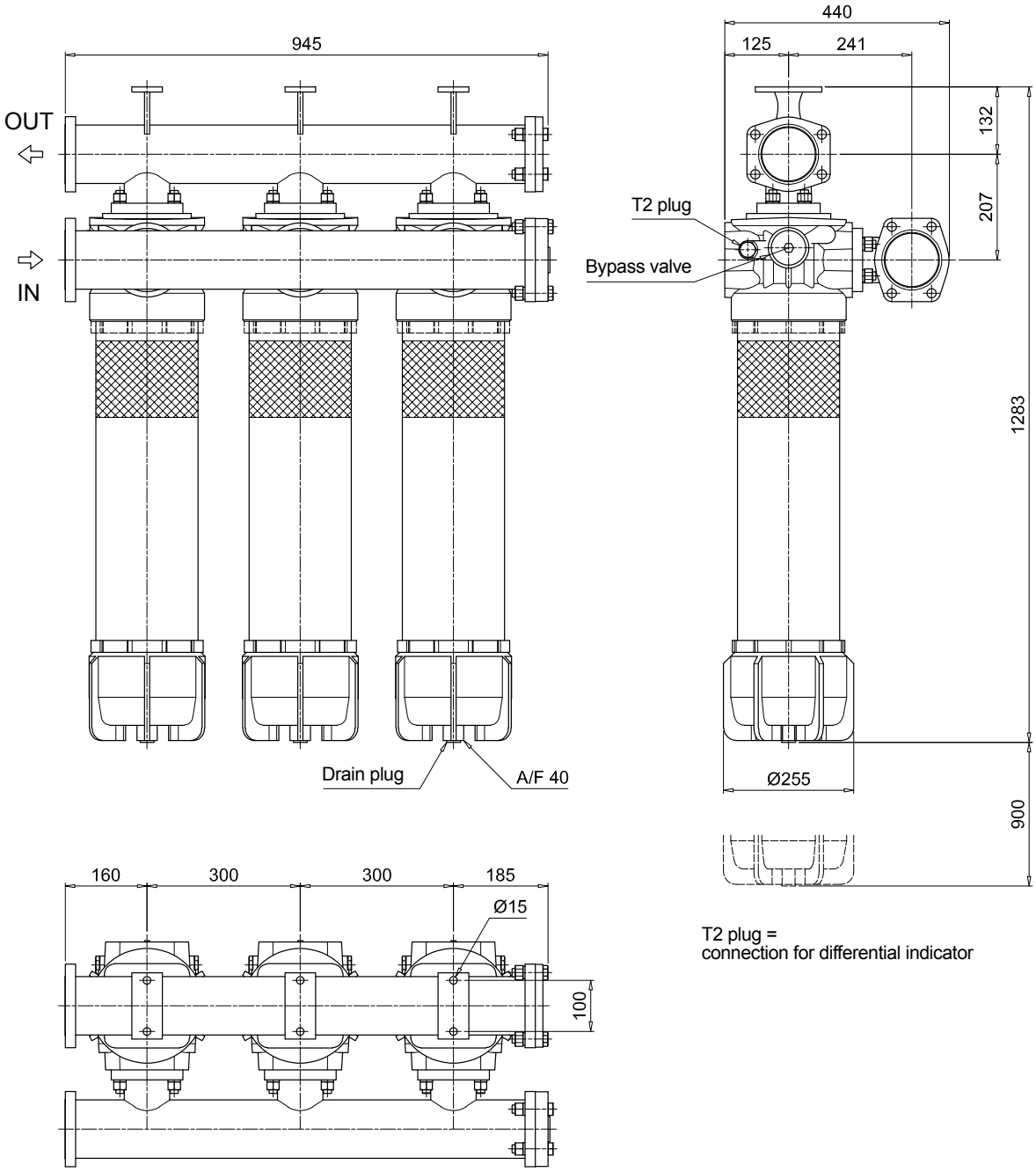

T2 plug =
connection for differential indicator

Order number for spare parts

LMP 902 - 903

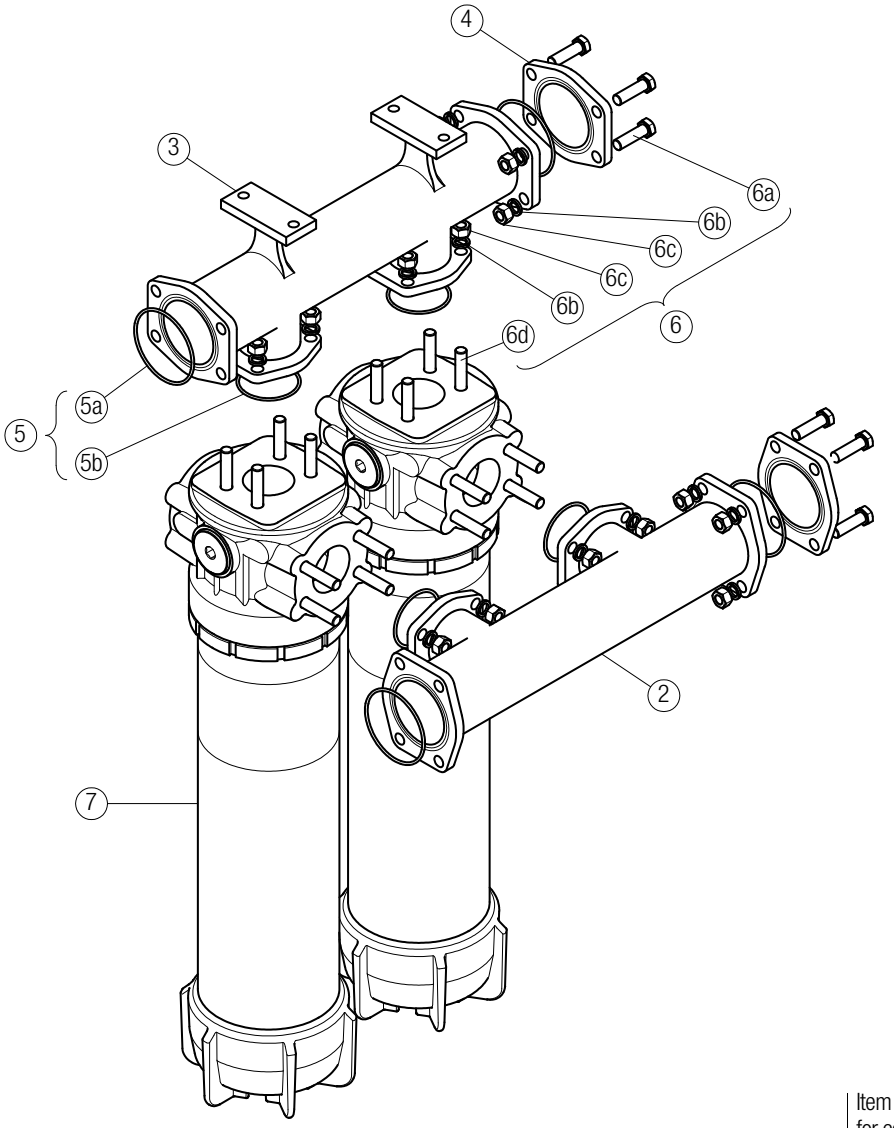

Item 7:
for complete filter code and spare parts, see
LMP 900 - 901 series chapter

Quantity:
- filter spare parts:
LMP 902 - 2 pcs.
LMP 903 - 3 pcs.

- filter seal kit:
LMP 902 - 2 pcs.
LMP 903 - 3 pcs.

Item:	2		3	4		5 (5a-5b)			6 (6a ÷ 6d)		7	
Filter series	Manifold			4" SAE 3000 psi plugged flange		Manifolds seal kit			Threaded fasteners kit		Filter	
	Q.ty	IN	OUT	Q.ty		Q.ty	NBR	FPM	Q.ty		Q.ty	
LMP 902	1 pc.	01039270	01039271	2 pcs.	01042012	1 pc.	02050404	02050405	1 pc.	02049051	2 pcs.	LMP9012xxF1xxxNP02
LMP 903	1 pc.	01039337	01039338	2 pcs.		1 pc.	02050404	02050405	1 pc.	02049052	3 pcs.	

Clogging indicators

Differential indicators

Introduction

Filter elements are efficient only if their Dirt Holding Capacity is fully exploited. This is achieved by using filter housings equipped with clogging indicators.

These devices trip when the clogging of the filter element causes an increase in pressure drop across the filter element.

The indicator is set to alarm before the element becomes fully clogged.

MP Filtri can supply differential pressure indicators with a visual, electrical or both signals.

Suitable indicator types

DIFFERENTIAL INDICATORS

Differential indicators are used on the Pressure line to check the efficiency of the filter element.
They measure the pressure upstream and downstream of the filter element (differential pressure).
Standard items are produced with special connection G 1/2" size.
Also available in Stainless Steel models.

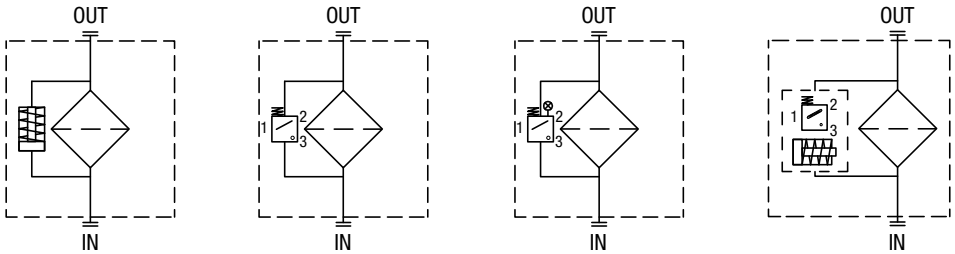

Quick reference guide

	Filter series	Visual indicator	Electrical indicator	Electrical / Visual indicator	Electronic indicator
With bypass valve	LMP 110 - 112 - 116 - 118 - 119 MULTIPORT LMP 120 - 122 - 123 MULTIPORT LMP 210 - 211 - LDP LMP 400 - 401 & 430 - 431 LMP 900 - 901 LMP 902 - 903 LMP 950 - 951 LMP 952 - 953 - 954 LMD 211 - 400 - 401 - 431 - 951 - LDD	DVA20xP01 DVM20xP01	DEA20xA50P01 DEM20xAxxP01	DLA20xA51P01 DLA20xA52P01 DLA20xA71P01 DLE20xA50P01 DLE20xF50P01	DTA20xF70P01
Without bypass valve	LMP 110 - 112 - 116 - 118 - 119 MULTIPORT LMP 120 - 122 - 123 MULTIPORT LMP 210 - 211 - LDP LMP 400 - 401 & 430 - 431 LMP 900 - 901 LMP 902 - 903 LMP 950 - 951 LMP 952 - 953 - 954 LMD 211 - 400 - 401 - 431 - 951 - LDD	DVA50xP01 DVM50xP01	DEA50xA50P01 DEM50xAxxP01	DLA50xA51P01 DLA50xA52P01 DLA50xA71P01 DLE50xA50P01 DLE50xF50P01	DTA50xF70P01

DEA*50

Electrical Differential Indicator

Settings	Ordering code
2.0 bar ±10%	DE A 20 x A 50 P01
5.0 bar ±10%	DE A 50 x A 50 P01

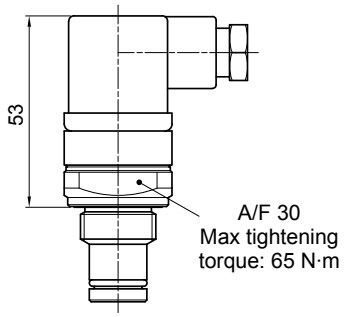

Hydraulic symbol

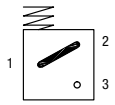

Electrical symbol

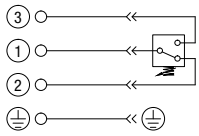

Materials
- Body: Brass
- Base: Black Nylon
- Contacts: Silver
- Seal: HNBR - FPM

Technical data
- Max working pressure: 420 bar
- Proof pressure: 630 bar
- Burst pressure: 1260 bar
- Working temperature: From -25 °C to +110 °C
- Compatibility with fluids: Mineral oils, Synthetic fluids HFA, HFB, HFC according to ISO 2943
- Degree protection: IP66 according to EN 60529 IP69K according to ISO 20653

Electrical data
- Electrical connection: EN 175301-803
- Resistive load: 0.2 A / 115 Vdc

DEM*10

Electrical Differential Indicator

Settings	Ordering code
2.0 bar ±10%	DE M 20 x x 10 P01
5.0 bar ±10%	DE M 50 x x 10 P01

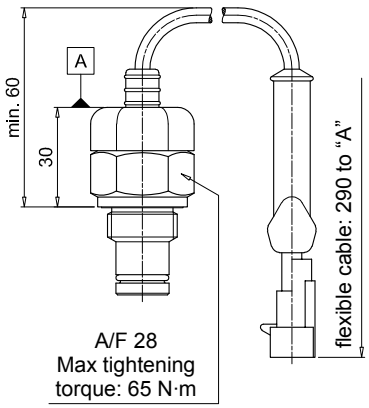

Hydraulic symbol

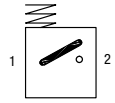

Electrical symbol

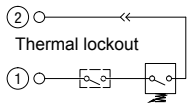

Materials
- Body: Brass
- Base: Black Nylon
- Contacts: Silver
- Seal: HNBR - FPM

Technical data
- Max working pressure: 420 bar
- Proof pressure: 630 bar
- Burst pressure: 1260 bar
- Working temperature: From -25 °C to +110 °C
- Compatibility with fluids: Mineral oils, Synthetic fluids HFA, HFB, HFC according to ISO 2943
- Degree protection: IP66 according to EN 60529

Electrical data
- Electrical connection: AMP Superseal series 1.5
- Resistive load: 0.2 A / 115 Vdc
- Switching type: Normally open contacts (NC on request)
- Thermal lockout: Normally open up to 30 °C (option "F")

DEM*20

Electrical Differential Indicator

Settings	Ordering code
2.0 bar ±10%	DE M 20 x x 20 P01
5.0 bar ±10%	DE M 50 x x 20 P01

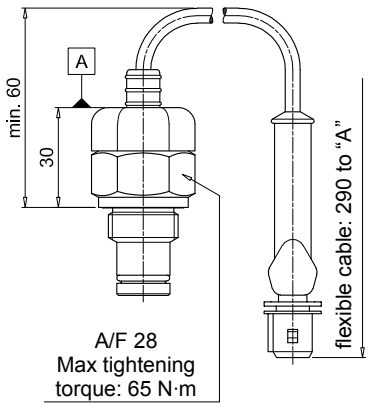

Hydraulic symbol

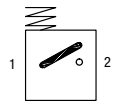

Electrical symbol

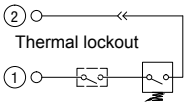

Materials
- Body: Brass
- Base: Black Nylon
- Contacts: Silver
- Seal: HNBR - FPM

Technical data
- Max working pressure: 420 bar
- Proof pressure: 630 bar
- Burst pressure: 1260 bar
- Working temperature: From -25 °C to +110 °C
- Compatibility with fluids: Mineral oils, Synthetic fluids HFA, HFB, HFC according to ISO 2943
- Degree protection: IP66 according to EN 60529

Electrical data
- Electrical connection: AMP Time junior
- Resistive load: 0.2 A / 115 Vdc
- Switching type: Normally open contacts (NC on request)
- Thermal lockout: Normally open up to 30 °C (option "F")

Dimensions

DEM*30

Electrical Differential Indicator

Settings	Ordering code
2.0 bar ±10%	DE M 20 x x 30 P01
5.0 bar ±10%	DE M 50 x x 30 P01

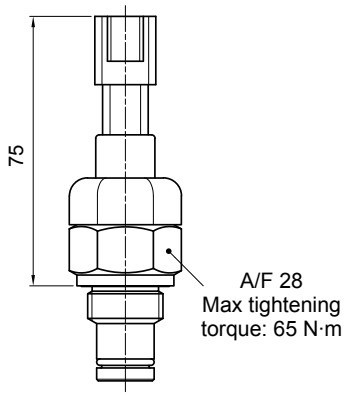

Hydraulic symbol

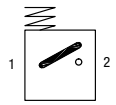

Electrical symbol

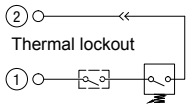

Materials
- Body: Brass
- Base: Black Nylon
- Contacts: Silver
- Seal: HNBR - FPM

Technical data
- Max working pressure: 420 bar
- Proof pressure: 630 bar
- Burst pressure: 1260 bar
- Working temperature: From -25 °C to +110 °C
- Compatibility with fluids: Mineral oils, Synthetic fluids HFA, HFB, HFC according to ISO 2943
- Degree protection: IP66 according to EN 60529

Electrical data
- Electrical connection: Deutsch DT-04-2-P
- Resistive load: 0.2 A / 115 Vdc
- Switching type: Normally open contacts (NC on request)
- Thermal lockout: Normally open up to 30 °C (option "F")

DEM*35

Electrical Differential Indicator

Settings	Ordering code
2.0 bar ±10%	DE M 20 x x 35 P01
5.0 bar ±10%	DE M 50 x x 35 P01

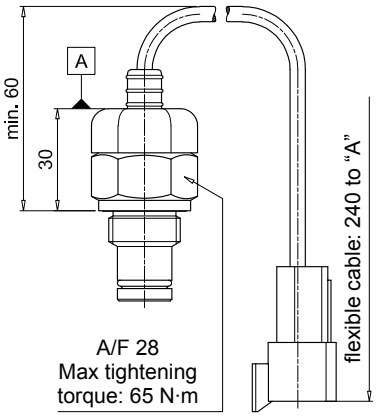

Hydraulic symbol

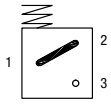

Electrical symbol

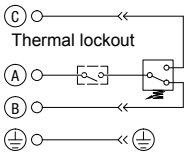

Materials
- Body: Brass
- Base: Black Nylon
- Contacts: Silver
- Seal: HNBR - FPM

Technical data
- Max working pressure: 420 bar
- Proof pressure: 630 bar
- Burst pressure: 1260 bar
- Working temperature: From -25 °C to +110 °C
- Compatibility with fluids: Mineral oils, Synthetic fluids HFA, HFB, HFC according to ISO 2943
- Degree protection: IP66 according to EN 60529

Electrical data
- Electrical connection: Deutsch DT-04-3-P
- Resistive load: 0.2 A / 115 Vdc
- Switching type: SPDT contact
- Thermal lockout: Normally open up to 30 °C (option "F")

DLA*51 - DLA*52

Electrical/Visual Differential Indicator

Settings	Ordering code
2.0 bar ±10%	DL A 20 x A x x P01
5.0 bar ±10%	DL A 50 x A x x P01

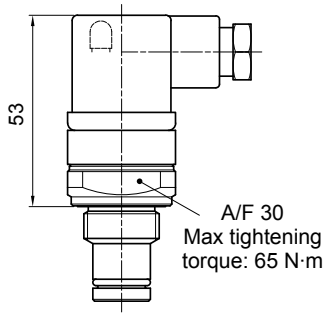

Hydraulic symbol

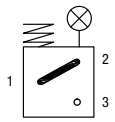

Electrical symbol

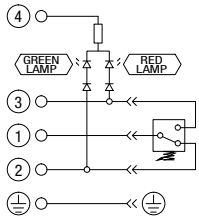

Materials
- Body: Brass
- Base: Transparent Nylon
- Contacts: Silver
- Seal: HNBR - FPM

Technical data
- Max working pressure: 420 bar
- Proof pressure: 630 bar
- Burst pressure: 1260 bar
- Working temperature: From -25 °C to +110 °C
- Compatibility with fluids: Mineral oils, Synthetic fluids HFA, HFB, HFC according to ISO 2943
- Degree protection: IP66 according to EN 60529 IP69K according to ISO 20653

Electrical data

- Electrical connection:	EN 175301-803	
- Type	51	52
- Lamps	24 Vdc	110 Vdc
- Resistive load:	1 A / 24 Vdc	1 A / 110 Vdc

DLA*71

Electrical/Visual Differential Indicator

Settings	Ordering code
2.0 bar ±10%	DL A 20 x A 71 P01
5.0 bar ±10%	DL A 50 x A 71 P01

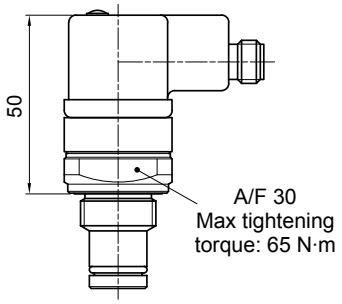

Hydraulic symbol

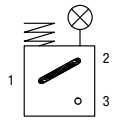

Electrical symbol

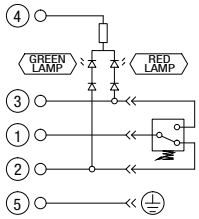

Materials
- Body: Brass
- Base: Black Nylon
- Contacts: Silver
- Seal: HNBR - FPM

Technical data
- Max working pressure: 420 bar
- Proof pressure: 630 bar
- Burst pressure: 1260 bar
- Working temperature: From -25 °C to +110 °C
- Compatibility with fluids: Mineral oils, Synthetic fluids HFA, HFB, HFC according to ISO 2943
- Degree protection: IP65 according to EN 60529 IP69K according to ISO 20653

Electrical data
- Electrical connection: IEC 61076-2-101 D (M12)
- Lamps 24 Vdc
- Resistive load: 0.4 A / 24 Vdc

DLE*A50

Electrical/Visual Differential Indicator

Settings	Ordering code
2.0 bar ±10%	DL E 20 x A 50 P01
5.0 bar ±10%	DL E 50 x A 50 P01

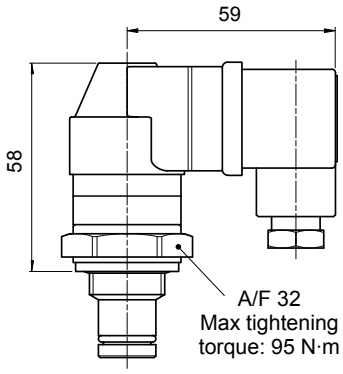

Hydraulic symbol

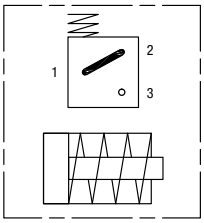

Electrical symbol

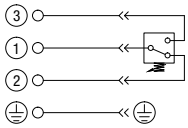

Materials
- Body: Brass
- Base: Black Nylon
- Contacts: Silver
- Seal: HNBR - FPM

Technical data
- Max working pressure: 420 bar
- Proof pressure: 630 bar
- Burst pressure: 1260 bar
- Working temperature: From -25 °C to +110 °C
- Compatibility with fluids: Mineral oils, Synthetic fluids HFA, HFB, HFC according to ISO 2943
- Degree protection: IP65 according to EN 60529

Electrical data
- Electrical connections: EN 175301-803
- Resistive load: 5 A / 250 Vac
- Available the connector with lamps

DLE*F50

Electrical/Visual Differential Indicator

Settings	Ordering code
2.0 bar ±10%	DL E 20 x F 50 P01
5.0 bar ±10%	DL E 50 x F 50 P01

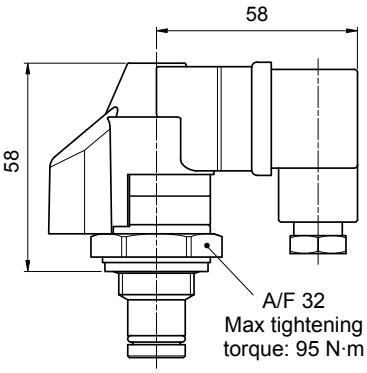

Hydraulic symbol

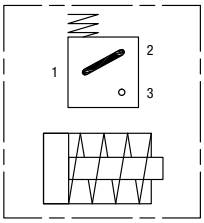

Electrical symbol

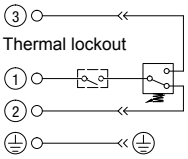

Materials
- Body: Brass
- Base: Black Nylon
- Contacts: Silver
- Seal: HNBR - FPM

Technical data
- Max working pressure: 420 bar
- Proof pressure: 630 bar
- Burst pressure: 1260 bar
- Working temperature: From -25 °C to +110 °C
- Compatibility with fluids: Mineral oils, Synthetic fluids HFA, HFB, HFC according to ISO 2943
- Degree protection: IP65 according to EN 60529

Electrical data
- Electrical connections: EN 175301-803
- Resistive load: 5 A / 250 Vac
- Thermal lockout setting: +30 °C

Dimensions

DTA*70

Electronic Differential Indicator

Settings	Ordering code
2.0 bar ±10%	DT A 20 x x 70 P01
5.0 bar ±10%	DT A 50 x x 70 P01

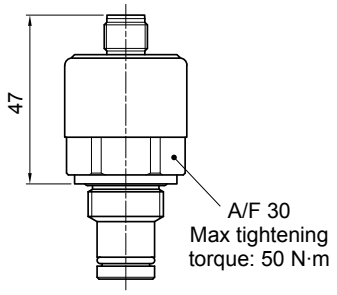

Hydraulic symbol

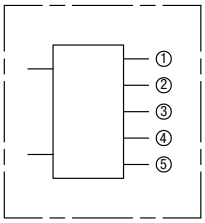

Electrical symbol

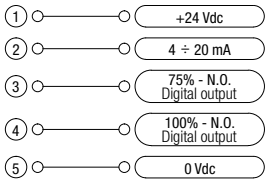

Materials
- Body: Brass
- Internal parts: Brass - Nylon
- Contacts: Silver
- Seal: HNBR - FPM

Industry 4.0 READY

Technical data
- Max working pressure: 420 bar
- Proof pressure: 630 bar
- Burst pressure: 1260 bar
- Compatibility with fluids: Mineral oils, Synthetic fluids HFA, HFB, HFC according to ISO 2943
- Degree protection: IP67 according to EN 60529

Electrical data
- Electrical connection: IEC 61076-2-101 D (M12)
- Power supply: 24 Vdc
- Analogue output: From 4 to 20 mA
- Thermal lockout: 30 °C (all output signals stalled up to 30 °C)

DVA

Visual Differential Indicator

Settings	Ordering code
2.0 bar ±10%	DV A 20 x P01
5.0 bar ±10%	DV A 50 x P01

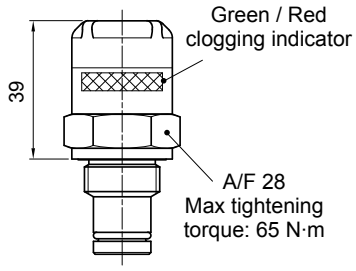

Hydraulic symbol

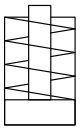

Materials
- Body: Brass
- Internal parts: Brass - Nylon
- Contacts: Silver
- Seal: HNBR - FPM

Technical data
- Reset: Automatic reset
- Max working pressure: 420 bar
- Proof pressure: 630 bar
- Burst pressure: 1260 bar
- Working temperature: From -25 °C to +110 °C
- Compatibility with fluids: Mineral oils, Synthetic fluids HFA, HFB, HFC according to ISO 2943
- Degree protection: IP65 according to EN 60529

DVM

Visual Differential Indicator

Settings	Ordering code
2.0 bar ±10%	DV M 20 x P01
5.0 bar ±10%	DV M 50 x P01

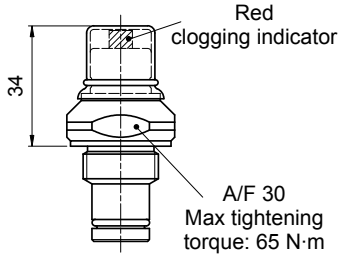

Hydraulic symbol

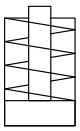

Materials
- Body: Brass
- Internal parts: Brass - Nylon
- Contacts: Silver
- Seal: HNBR - FPM

Technical data
- Reset: Manual reset
- Max working pressure: 420 bar
- Proof pressure: 630 bar
- Burst pressure: 1260 bar
- Working temperature: From -25 °C to +110 °C
- Compatibility with fluids: Mineral oils, Synthetic fluids HFA, HFB, HFC according to ISO 2943
- Degree protection: IP65 according to EN 60529

T2

Indicator plug

Seal	Ordering code
HNBR	T2 H
FPM	T2 V

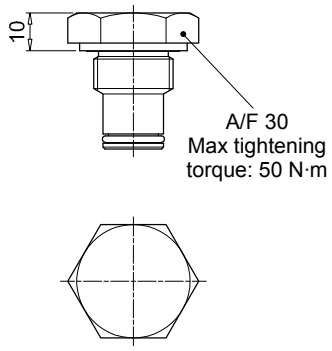

Materials

- Body: Phosphatized steel
- Seal: HNBR / FPM

DESIGNATION & ORDERING CODE - DIFFERENTIAL INDICATORS

Configuration example 1:	DE	M	20	H	F	50	P01
Configuration example 2:	DL	E	50	V	A	71	P01
Configuration example 3:	DT	A	20	H	F	70	P01
Configuration example 4:	DV	M	50	V			P01

Series

- **DE** Electrical differential indicator
- **DL** Electrical/Visual differential indicator
- **DT** Electronic differential indicator
- **DV** Visual differential indicator

Type	DE	DL	DT	DV
A Standard type	•	•	•	**A** With automatic reset
M With wired electrical connection	•			**M** With manual reset
E For high power supply		•		

Pressure setting

- **20** 2.0 bar
- **50** 5.0 bar

Seals

- **H** HNBR
- **V** FPM

Thermostat	DEA	DEM	DLA	DLE	DT	DV
A Without	•	•	•	•		
F With thermostat		•		•	•	

Electrical connections	DEA	DEM	DLA	DLE	DT	DV
10 Connection AMP Superseal series 1.5		•				
20 Connection AMP Timer Junior		•				
30 Connection Deutsch DT-04-2-P		•				
35 Connection Deutsch DT-04-3-P		•				
50 Connection EN 175301-803	•			•		
51 Connection EN 175301-803, transparent base with lamps 24 Vdc			•			
52 Connection EN 175301-803, transparent base with lamps 110 Vdc			•			
70 Connection IEC 61076-2-101 D (M12)					•	
71 Connection IEC 61076-2-101 D (M12), black base with lamps 24 Vdc			•			

Option

- **P01** MP Filtri standard
- **Pxx** Customized

DESIGNATION & ORDERING CODE - DIFFERENTIAL INDICATOR PLUG

Configuration example	T2	H

Series

- **T2** Indicator plug

Seals

- **H** HNBR
- **V** FPM

Accessories

RETAINING CLAMP

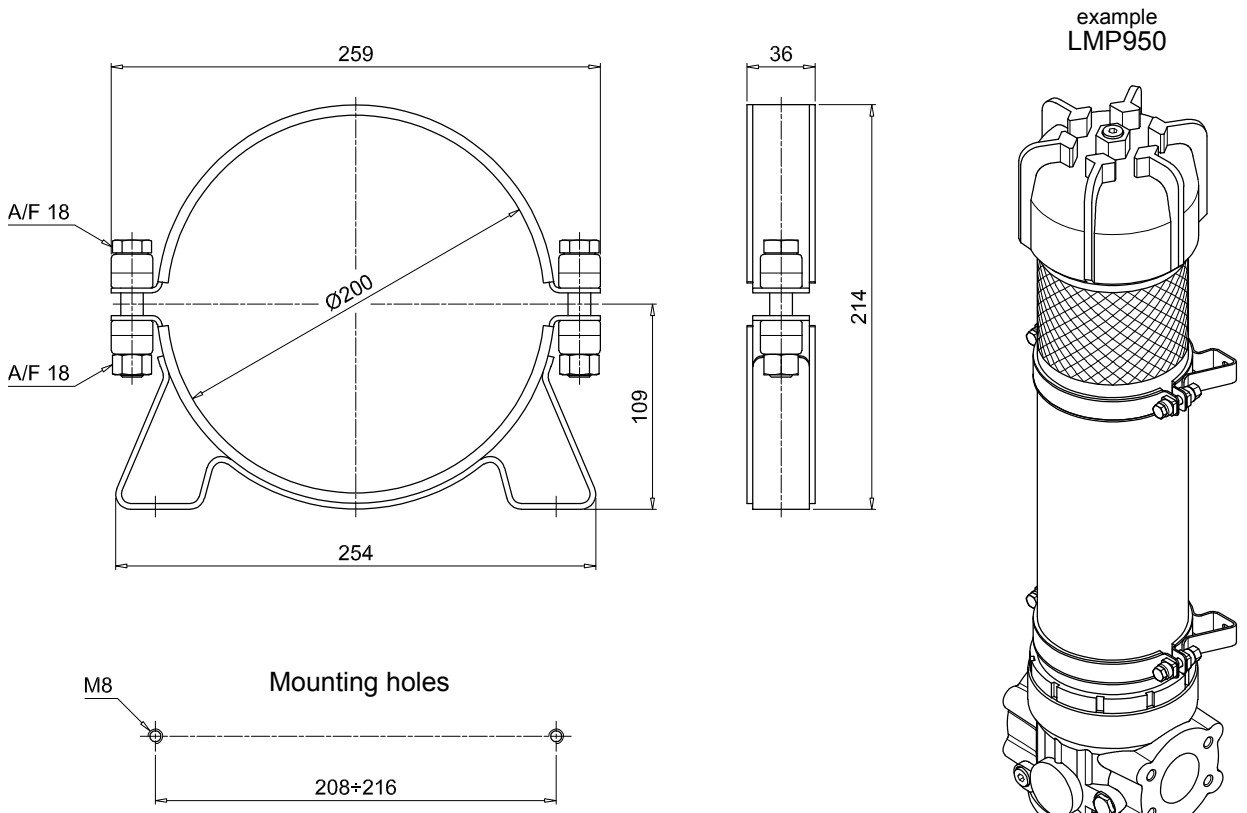

Configuration example: CFA | 20 | M | P01

Series
CFA Retaining clamp

Size
20

Screw
M Metric

Execution
P01 MP Filtri standard

Clogging indicators are devices that check the life time of the filter elements. They measure the pressure drop through the filter element directly connected to the filter housing.
These devices trip when the clogging of the filter element causes a pressure drop increasing across the filter element.
Filter elements are efficient only if their Dirt Holding Capacity is fully exploited. This is achieved by using filter housings equipped with clogging indicators. The indicator is set to alarm before the element becomes fully clogged.

MP Filtri can supply indicators of the following designs:
- **Vacuum switches and gauges**
- **Pressure switches and gauges**
- **Differential pressure indicators**

These type of devices can be provided with a visual, electrical or both signals. The electronic differential pressure clogging indicator is also available. It provides both analogical 4-20 mA output and digital warning (75% of clogging) and alarm (clogging) outputs.

Clogging Indicators

Clogging indicators

Suitable indicator types

VACUUM INDICATORS
Vacuum indicators are used on the Suction line to check the efficiency of the filter element.
They measure the pressure downstream of the filter element.
Standard items are produced with R 1/4" EN 10226 connection.
Available products with R 1/8" EN 10226 to be fitted on MPS series.

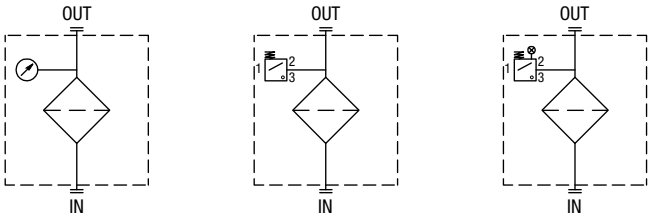

BAROMETRIC INDICATORS
Pressure indicators are used on the Return line to check the efficiency of the filter element.
They measure the pressure upstream of the filter element.
Standard items are produced with R 1/8" EN 10226 connection.

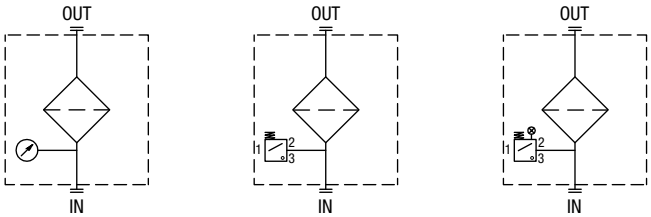

DIFFERENTIAL INDICATORS
Differential indicators are used on the Pressure line to check the efficiency of the filter element.
They measure the pressure upstream and downstream of the filter element (differential pressure).
Standard items are produced with special connection G 1/2" size.
Also available in Stainless Steel models.

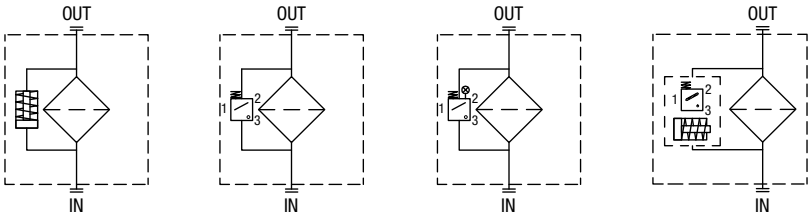

Filter family	Filter series		Electrical indicator	Electrical / Visual indicator	Electronic indicator	Visual indicator
SUCTION FILTERS	ELIXIR® SFEX060-080-110-160		VEB21AA50P01	VLB21AA51P01 VLB21AA52P01 VLB21AA53P01 VLB21AA71P01		VVB16P01 VVS16P01
	SF2 250 - 350 SF2 500 - 501 - 503 - 504 - 505 SF2 510 - 535 - 540		VEA21AA50P01	VLA21AA51P01 VLA21AA52P01 VLA21AA53P01 VLA21AA71P01		VVA16P01 VVR16P01
RETURN FILTERS	With bypass valve	ELIXIR® RFEX060-080-110-160	BEA15HA50P01 BEM15HA41P01	BLA15HA51P01 BLA15HA52P01 BLA15HA53P01 BLA15HA71P01		BVA14P01 BVR14P01 BVP15HP01 BVQ15HP01
	Without bypass valve	ELIXIR® RFEX060-080-110-160	BEA20HA50P01 BEM20HA41P01	BLA20HA51P01 BLA20HA52P01 BLA20HA53P01 BLA20HA71P01		BVA25P01 BVR25P01 BVP20HP01 BVQ20HP01
	With bypass valve	MPFX-MPTX-MPF-MPT - bypass 1.75 bar MPH - bypass 1.75 bar RF2250 - RF2350 - bypass 1.75 bar	BEA15HA50P01 BEM15HA41P01	BLA15HA51P01 BLA15HA52P01 BLA15HA53P01 BLA15HA71P01		BVA14P01 BVR14P01 BVP15HP01 BVQ15HP01
	With bypass valve	MPFX-MPTX-MPF-MPT - bypass 3 bar MPH - bypass 2.5 bar FRI 255 RF2250 - RF2350 - bypass 3 bar	BEA20HA50P01 BEM20HA41P01	BLA20HA51P01 BLA20HA52P01 BLA20HA53P01 BLA20HA71P01		BVA25P01 BVR25P01 BVP20HP01 BVQ20HP01
	MPLX FRI 025 - 040 - 100 - 250 - 630 - 850		DEA20xA50P01 DEM20xA10P01 DEM20xA20P01 DEM20xA30P01 DEM20xA35P01	DLA20xA51P01 DLA20xA52P01 DLA20xA71P01 DLE20xA50P01 DLE20xF50P01	DTA20xF70P01	DVA20xP01 DVM20xP01
RETURN / SUCTION FILTERS	Suction line	MRSX 116 - 165 - 166	VEB21AA50P01	VLB21AA51P01 VLB21AA52P01 VLB21AA53P01 VLB21AA71P01		VVB16P01 VVS16P01
	Return line	MRSX 116 - 165 - 166 LMP 124 MULTIPORT	BEA25HA50P01 BEM25HA41P01 BET25HF10P01 BET25HF30P01 BET25HF50P01	BLA25HA51P01 BLA25HA52P01 BLA25HA53P01 BLA25HA71P01		BVA25P01 BVR25P01 BVP20HP01 BVQ20HP01
SPIN-ON FILTERS	Suction line	MPS 050 - 070 - 100 - 150 MPS 200 - 250 - 300 - 350	VEB21AA50P01	VLB21AA51P01 VLB21AA52P01 VLB21AA53P01 VLB21AA71P01		VVB16P01 VVS16P01
	Return line	MPS 050 - 070 - 100 - 150 MPS 200 - 250 - 300 - 350	BEA15HA50P01 BEM15HA41P01	BLA15HA51P01 BLA15HA52P01 BLA15HA53P01 BLA15HA71P01		BVA14P01 BVR14P01 BVP20HP01 BVQ20HP01
	In-line	MPS 051 - 071 - 101 - 151 MPS 301 - 351 MSH 050 - 070 - 100 - 150	DEA12xA50P01 DEM12xAxxP01	DLA12xA51P01 DLA12xA52P01 DLA12xA71P01 DLE12xA50P01 DLE12xF50P01 DLE20xF50P01 DLE20xF50P01	DTA12xA70P01 DTA12xF70P01 DTA20xA70P01 DTA20xF70P01	DVA12xP01 DVM12xP01

QUICK REFERENCE GUIDE

Filter family	Filter series		Electrical indicator	Electrical / Visual indicator	Electronic indicator	Visual indicator	Hazardous area electronic indicator Ex
LOW & MEDIUM PRESSURE FILTERS	With bypass valve	ELIXIR® LFEX060-080-110-160	DES25HA10P01 DES25HA30P01 DES25HA80P01			DVS25HP01	
	Without bypass valve	ELIXIR® LFEX060-080-110-160	DES40HA10P01 DES40HA30P01 DES40HA80P01			DVS40HP01	
	With bypass valve	LMP 110 - 112 - 116 - 118 - 119 MULTIPORT LMP 120 - 122 - 123 MULTIPORT LMP 210 - 211 - LDP LMP 400 - 401 & 430 - 431 LMP 900 - 901 LMP 902 - 903 LMP 950 - 951 LMP 952 - 953 - 954 LMD 211 - 400 - 401 - 431 - 951 - LDD	DEA20xA50P01 DEM20xAxxP01	DLA20xA51P01 DLA20xA52P01 DLA20xA71P01 DLE20xA50P01 DLE20xF50P01	DTA20xF70P01	DVS25HP01 DVS40HP01 DVA20xP01 DVM20xP01	
	Without bypass valve	LMP 110 - 112 - 116 - 118 - 119 MULTIPORT LMP 120 - 122 - 123 MULTIPORT LMP 210 - 211 - LDP LMP 400 - 401 & 430 - 431 LMP 900 - 901 LMP 902 - 903 LMP 950 - 951 LMP 952 - 953 - 954 LMD 211 - 400 - 401 - 431 - 951 - LDD	DEA50xA50P01 DEM50xAxxP01	DLA50xA51P01 DLA50xA52P01 DLA50xA71P01 DLE50xA50P01 DLE50xF50P01	DTA50xF70P01	DVA50xP01 DVM50xP01	
HIGH PRESSURE FILTERS	With bypass valve	FMP 039 - 065 - 135 - 320 FHP 010 - 011 - 065 - 135 - 350 - 500 FMM 050 - 150 FHA 051 FHM 006 - 007 - 010 - 050 - 065 - 135 - 320 - 500 FHB 050 - 065 - 135 - 320 FHF 325 FHD 021 - 051 - 326 - 333	DEA50xA50P01 DEM50xAxxP01	DLA50xA51P01 DLA50xA52P01 DLA50xA71P01 DLE50xA50P01 DLE50xF50P01	DTA50xF70P01	DVA50xP01 DVM50xP01	DEH50xA48P01 DEH50xA49P01 DEH50xA70P01 DEH70xA48P01 DEH70xA49P01 DEH70xA70P01
	Without bypass valve	FMP 039 - 065 - 135 - 320 FHP 010 - 011 - 065 - 135 - 350 - 500 FMM 050 - 150 FHA 051 FHM 006 - 007 - 010 - 050 - 065 - 135 - 320 - 500 FHB 050 - 065 - 135 - 320 FHF 325 FHD 021 - 051 - 326 - 333	DEA70xA50P01 DEM70xAxxP01 DEA95xA50P01 DEM95xAxxP01	DLA70xA51P01 DLA70xA52P01 DLA70xA71P01 DLE70xA50P01 DLE70xF50P01 DLA95xA51P01 DLA95xA52P01 DLE95xA50P01 DLE95xF50P01	DTA70xF70P01 DTA95xF70P01	DVA70xP01 DVM70xP01 DVA95xP01 DVM95xP01	DEH50xA48P01 DEH50xA49P01 DEH50xA70P01 DEH70xA48P01 DEH70xA49P01 DEH70xA70P01
STAINLESS STEEL HIGH PRESSURE FILTERS	With bypass valve	FZH 010 - 011 - 039 FZP 039 - 136 FZX 011 FZB 039 FZM 039 FZD 051	DEX50xA50P01	DLX50xA51P01 DLX50xA52P01		DVX50xP01 DVY50xP01	DEH50xA48P01 DEH50xA49P01 DEH50xA70P01 DEH70xA48P01 DEH70xA49P01 DEH70xA70P01
	Without bypass valve	FZH 010 - 011 - 039 FZP 039 - 136 FZB 039 FZM 039 FZD 010 - 021 - 051	DEX70xA50P01 DEX95xA50P01	DLX70xA51P01 DLX70xA52P01 DLX95xA51P01		DVX70xP01 DVY70xP01 DVX95xP01 DVY95xP01	DEH50xA48P01 DEH50xA49P01 DEH50xA70P01 DEH70xA48P01 DEH70xA49P01 DEH70xA70P01

NOTES

All data, details and words contained in this publication are provided for information purposes only.
MP Filtri reserves the right to make modifications to the models and versions of the described products at any time for both technical and / or commercial reasons.
The colors and the pictures of the products are purely indicative.
Any reproduction, partial or total, of this document is strictly forbidden.
All rights are strictly reserved.

WORLDWIDE NETWORK

HEADQUARTERS

MP Filtri S.p.A.
Pessano con Bornago
Milano
Italy
sales@mpfiltri.com

BRANCH OFFICES

ITALFILTRI LLC
Moscow
Russia
mpfiltrirussia@yahoo.com

MP Filtri Canada Inc.
Concord, Ontario
Canada
sales@mpfiltricanada.com

MP Filtri France SAS
Lyon
AURA
France
sales@mpfiltrifrance.com

MP Filtri Germany GmbH
St. Ingbert
Germany
sales@mpfiltri.de

MP Filtri India Pvt. Ltd.
Bangalore
India
sales@mpfiltri.co.in

MP Filtri (Shanghai) Co., Ltd.
Shanghai
P.R. China
sales@mpfiltrishanghai.com

MP Filtri U.K. Ltd.
Bourton on the Water
Gloucestershire
United Kingdom
sales@mpfiltri.co.uk

MP Filtri U.S.A. Inc.
Quakertown, PA
U.S.A.
sales@mpfiltriusa.com

PASSION TO PERFORM

mpfiltri.com

CMPEN001G
EN - Rev. 11-2021